LAMPIRAN

LAMPIRAN I

***DRAWING* GENERATOR SINKRON MAGNET PERMANEN**

TAMPAK DEPAN

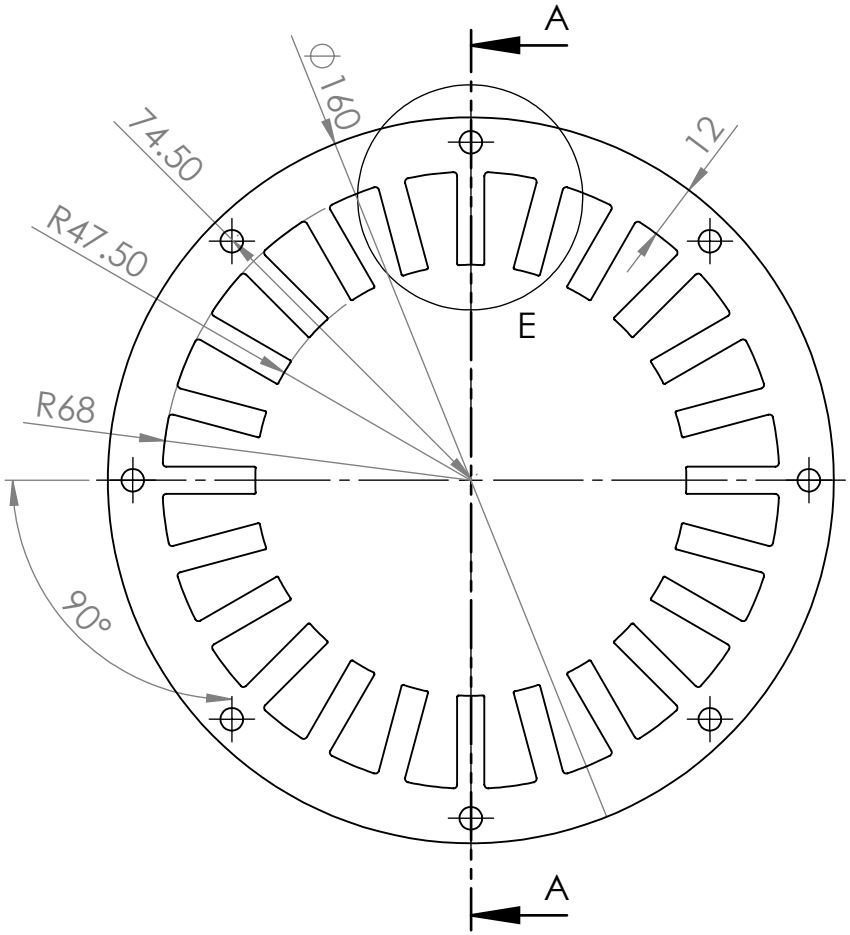

TAMPAK SAMPING

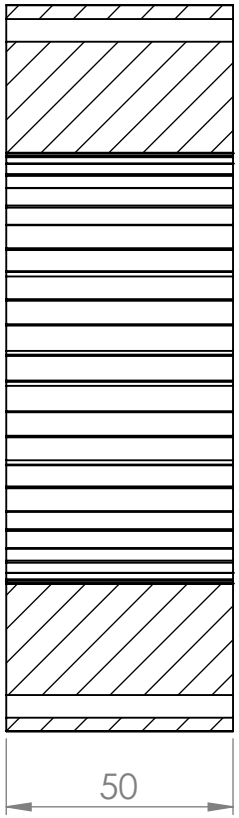

DETAIL E

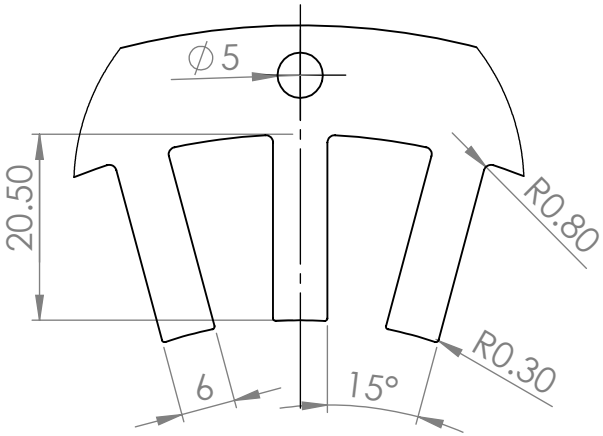

DIMENSIONS ARE IN MILLIMETERS

FINISH: 2018-01-31

DO NOT SCALE DRAWING

REVISION

MATERIAL: M470-50A

	NAME	DATE
DESIGN	MUHAMMAD IRSYADUL UMAMI	2017-10-11
SIMULATION	MUHAMMAD IRSYADUL UMAMI	2017-11-20
DRAWN	MUHAMMAD IRSYADUL UMAMI	2017-12-14
APPRVD 1	I MADE ARI NRARTHA, ST., MT.	
APPRVD 2	Dr. rer. nat. TETI ZUBAIDAH, ST., MT.	
CHK'D 1	Dr. I MADDE GINARSA, ST., MT.	
CHK'D 2	SUPRIYATNA, ST., MT.	
CHK'D 3	AGUNG BUDI MULJONO, ST., MT.	

MODEL : 24 SLOT

PART : STATOR CORE

TITLE: Desain Generator Sinkron Magnet Permanen Untuk PLTB Daya 500 Watt Menggunakaan Perangkat Lunak MagNet Infolytica

DWG NO. 01

A4

SCALE: 3:5

SHEET 1 OF 1

TAMPAK DEPAN

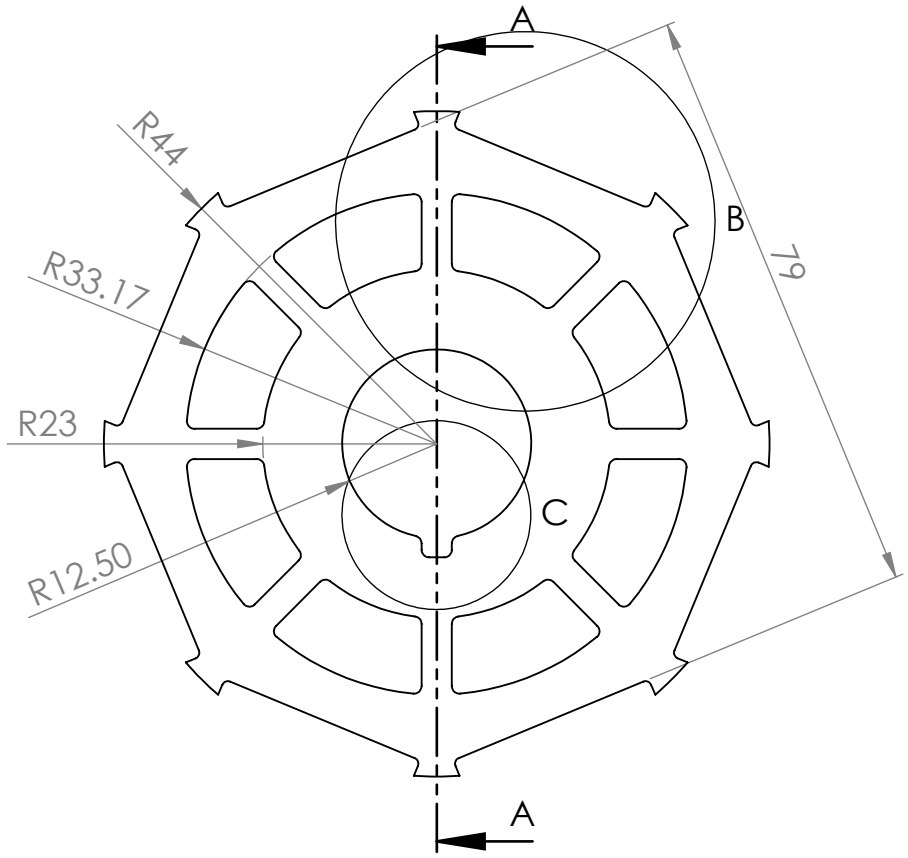

TAMPAK SAMPING

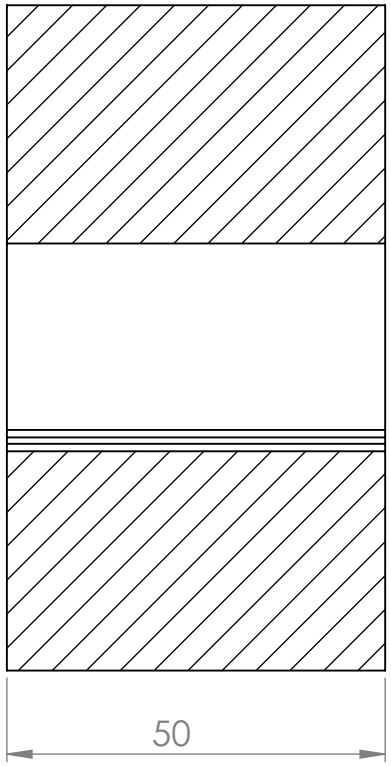

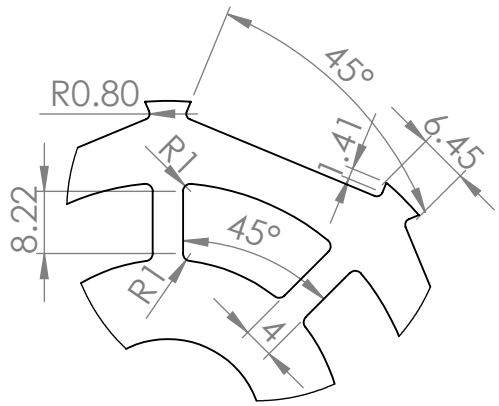

DETAIL B

DETAIL C

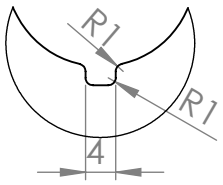

DIMENSIONS ARE IN MILLIMETERS	FINISH: 2018-01-31		DEBUR AND BREAK SHARP EDGES	DO NOT SCALE DRAWING / REVISION
				MATERIAL: M470-50A
	NAMA	TANGGAL	MODEL : 8 POLE	TITLE: Desain Generator Sinkron Magnet Permanen Untuk PLTB Daya 500 Watt Menggunakaan Perangkat Lunak MagNet Infolytica
DESIGN	MUHAMMAD IRSYADUL UMAMI	2017-10-11		
SIMULATION	MUHAMMAD IRSYADUL UMAMI	2017-11-20	PART : ROTOR CORE	
DRAWN	MUHAMMAD IRSYADUL UMAMI	2017-12-14		
APPRVD 1	I MADE ARI NRARTHA, ST., MT.			
APPRVD 2	Dr. rer. nat. TETI ZUBAIDAH, ST., MT.			DWG NO. 02 / A4
CHK'D 1	Dr. I MADDE GINARSA, ST., MT.			
CHK'D 2	SUPRIYATNA, ST., MT.			
CHK'D 3	AGUNG BUDI MULJONO, ST., MT.			SCALE:1:1 / SHEET 1 OF 1

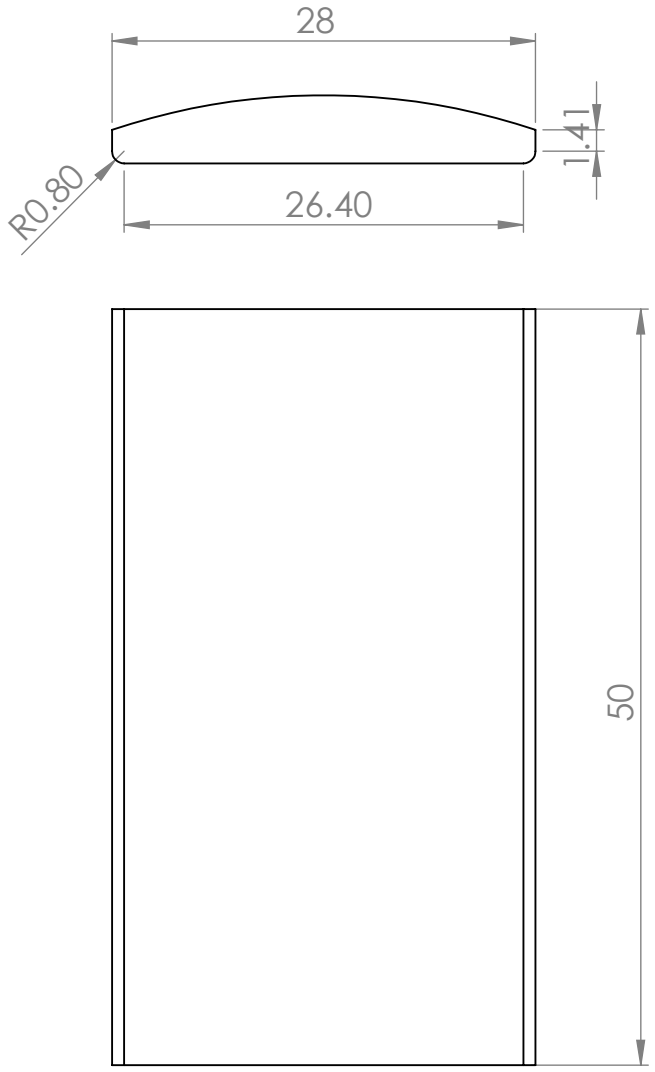

Neodymium Iron Boron 48/11 :
1. Br = 1375 mT
2. Hcb = 820 kA/m
3. Hcj = 875 kA/m
4. BHmaks = 48 MGOe

Ceramic 11 :
1. Br = 420 mT
2. Hcb = 200 kA/m
3. Hcj = 205 kA/m
4. BHmaks = 32.5 MGOe

DIMENSIONS ARE IN MILLIMETERS	FINISH: 2018-01-31		DEBUR AND BREAK SHARP EDGES	DO NOT SCALE DRAWING / REVISION
				MATERIAL: NEODYMIUM IRON BORON 48/11, CERAMIC 11

	NAMA	TANGGAL
DESIGN	MUHAMMAD IRSYADUL UMAMI	2017-10-11
SIMULATION	MUHAMMAD IRSYADUL UMAMI	2017-11-20
DRAWN	MUHAMMAD IRSYADUL UMAMI	2017-12-14
APPRVD 1	I MADE ARI NRARTHA, ST., MT.	
APPRVD 2	Dr. rer. nat. TETI ZUBAIDAH, ST., MT.	
CHK'D 1	Dr. I MADDE GINARSA, ST., MT.	
CHK'D 2	SUPRIYATNA, ST., MT.	
CHK'D 3	AGUNG BUDI MULJONO, ST., MT.	

MODEL : PERMANENT MAGNET

PART : ROTOR CORE

TITLE: Desain Generator Sinkron Magnet Permanen Untuk PLTB Daya 500 Watt Menggunakaan Perangkat Lunak MagNet Infolytica

DWG NO. 03

A4

SCALE: 2:1

SHEET 1 OF 1

LAMPIRAN II

Data Hasil Simulasi Tanpa Beban, Simulasi *Open Circuit*, Simulasi Berbeban, Dan Simulasi *Cogging* Generator Sinkron Magnet Permanen Jenis Neodymium Iron Boron 48/11

A. Tabel Hasil Simulasi Tanpa Beban Generator Sinkron Magnet Permanen Jenis Neodymium Iron Boron 48/11

1. Tegangan Fasa Generator Sinkron Magnet Permanen

t (ms)	Mekanikal (deg)	Elektrikal (deg)	Tegangan Fasa (Volt AC)			Vpeak (Volt AC)
			U	V	W	
0	0	0	0.00	0.00	0.00	0.00
0.67	3	12	101.97	69.40	-140.05	140.05
1.34	6	24	123.12	33.22	-138.41	138.41
2.01	9	36	134.99	-0.56	-134.72	134.99
2.68	12	48	138.69	-34.21	-122.88	138.69
3.35	15	60	140.15	-70.23	-101.49	140.15
4.02	18	72	139.92	-102.61	-68.47	139.92
4.69	21	84	138.37	-123.52	-32.36	138.37
5.36	24	96	134.53	-135.16	1.38	135.16
6.03	27	108	122.46	-138.73	35.08	138.73
6.7	30	120	100.79	-140.18	71.14	140.18
7.37	33	132	67.55	-139.89	103.27	139.89
8.04	36	144	31.50	-138.33	123.94	138.33
8.71	39	156	-2.20	-134.35	135.35	135.35
9.38	42	168	-35.93	-122.05	138.77	138.77
10.05	45	180	-72.04	-100.11	140.21	140.21
10.72	48	192	-103.92	-66.64	139.86	139.86
11.39	51	204	-124.32	-30.63	138.29	138.29
12.06	54	216	-135.51	3.05	134.17	135.51
12.73	57	228	-138.81	36.80	121.64	138.81
13.4	60	240	-140.23	72.94	99.41	140.23
14.07	63	252	-139.81	104.55	65.73	139.81
14.74	66	264	-138.23	124.70	29.78	138.23
15.41	69	276	-133.96	135.67	-3.87	135.67
16.08	72	288	-121.20	138.84	-37.67	138.84
16.75	75	300	-98.68	140.25	-73.84	140.25
17.42	78	312	-64.80	139.78	-105.20	139.78
18.09	81	324	-28.93	138.19	-125.09	138.19
18.76	84	336	4.69	133.75	-135.83	135.83
19.43	87	348	38.53	120.78	-138.89	138.89
20.1	90	360	74.73	97.97	-140.28	140.28
20.77	93	372	105.82	63.89	-139.75	139.75
21.44	96	384	125.46	28.07	-138.16	138.16
22.11	99	396	135.97	-5.53	-133.54	135.97
22.78	102	408	138.93	-39.41	-120.35	138.93
23.45	105	420	140.29	-75.62	-97.26	140.29

24.12	108	432	139.70	-106.43	-62.97	139.70
24.79	111	444	138.10	-125.83	-27.22	138.10
25.46	114	456	133.31	-136.10	6.36	136.10
26.13	117	468	119.89	-138.96	40.29	138.96
26.8	120	480	96.51	-140.31	76.51	140.31
27.47	123	492	62.05	-139.66	107.06	139.66
28.14	126	504	26.37	-138.06	126.21	138.06
28.81	129	516	-7.18	-133.10	136.25	136.25
29.48	132	528	-41.16	-119.45	139.01	139.01
30.15	135	540	-77.39	-95.77	140.34	140.34
30.82	138	552	-107.66	-61.13	139.63	139.63
31.49	141	564	-126.56	-25.52	138.01	138.01
32.16	144	576	-136.38	8.02	132.88	136.38
32.83	147	588	-139.04	42.04	119.01	139.04
33.5	150	600	-140.34	78.26	95.03	140.34
34.17	153	612	-139.58	108.24	60.23	139.58
34.84	156	624	-137.95	126.92	24.67	137.95
35.51	159	636	-132.63	136.50	-8.84	136.50
36.18	162	648	-118.53	139.07	-42.93	139.07
36.85	165	660	-94.26	140.36	-79.15	140.36
37.52	168	672	-59.30	139.54	-108.84	139.54
38.19	171	684	-23.83	137.90	-127.28	137.90
38.86	174	696	9.67	132.39	-136.63	136.63
39.53	177	708	43.81	118.08	-139.12	139.12
40.2	180	720	80.02	93.50	-140.38	140.38

2. Tegangan *Line* Generator Sinkron Magnet Permanen

t (ms)	Mekanikal (deg)	Elektrikal (deg)	Tegangan *LIne* (Volt AC)			Vpeak (Volt AC)
			UV	VW	UW	
0	0	0	0.00	0.00	0.00	0.00
0.67	3	12	-32.57	-209.45	242.02	242.02
1.34	6	24	-89.91	-171.63	261.54	261.54
2.01	9	36	-135.55	-134.17	269.72	269.72
2.68	12	48	-172.90	-88.67	261.57	261.57
3.35	15	60	-210.38	-31.26	241.64	241.64
4.02	18	72	-242.53	34.14	208.39	242.53
4.69	21	84	-261.89	91.16	170.73	261.89
5.36	24	96	-269.69	136.54	133.15	269.69
6.03	27	108	-261.18	173.80	87.38	261.18
6.7	30	120	-240.97	211.32	29.65	240.97
7.37	33	132	-207.44	243.16	-35.72	243.16
8.04	36	144	-169.83	262.27	-92.44	262.27
8.71	39	156	-132.14	269.69	-137.55	269.69
9.38	42	168	-86.12	260.82	-174.71	260.82
10.05	45	180	-28.06	240.32	-212.25	240.32
10.72	48	192	37.28	206.50	-243.78	243.78
11.39	51	204	93.68	168.92	-262.60	262.60
12.06	54	216	138.56	131.12	-269.68	269.68
12.73	57	228	175.61	84.83	-260.44	260.44
13.4	60	240	213.16	26.47	-239.64	239.64
14.07	63	252	244.36	-38.82	-205.54	244.36
14.74	66	264	262.93	-94.91	-168.02	262.93
15.41	69	276	269.62	-139.54	-130.09	269.62
16.08	72	288	260.04	-176.51	-83.53	260.04
16.75	75	300	238.93	-214.09	-24.84	238.93
17.42	78	312	204.58	-244.98	40.40	244.98
18.09	81	324	167.12	-263.29	96.16	263.29
18.76	84	336	129.06	-269.58	140.52	269.58
19.43	87	348	82.25	-259.68	177.43	259.68
20.1	90	360	23.24	-238.25	215.01	238.25
20.77	93	372	-41.94	-203.64	245.57	245.57
21.44	96	384	-97.39	-166.22	263.62	263.62
22.11	99	396	-141.50	-128.01	269.51	269.51
22.78	102	408	-178.34	-80.94	259.28	259.28
23.45	105	420	-215.90	-21.64	237.55	237.55
24.12	108	432	-246.13	43.46	202.67	246.13
24.79	111	444	-263.92	98.60	165.32	263.92
25.46	114	456	-269.42	142.46	126.96	269.42

26.13	117	468	-258.85	179.25	79.60	258.85
26.8	120	480	-236.82	216.82	20.00	236.82
27.47	123	492	-201.71	246.72	-45.01	246.72
28.14	126	504	-164.43	264.26	-99.84	264.26
28.81	129	516	-125.92	269.35	-143.43	269.35
29.48	132	528	-78.29	258.46	-180.17	258.46
30.15	135	540	-18.39	236.11	-217.72	236.11
30.82	138	552	46.53	200.76	-247.29	247.29
31.49	141	564	101.05	163.53	-264.58	264.58
32.16	144	576	144.40	124.86	-269.25	269.25
32.83	147	588	181.08	76.96	-258.05	258.05
33.5	150	600	218.60	16.77	-235.37	235.37
34.17	153	612	247.82	-48.01	-199.80	247.82
34.84	156	624	264.87	-102.25	-162.62	264.87
35.51	159	636	269.13	-145.34	-123.78	269.13
36.18	162	648	257.60	-182.00	-75.61	257.60
36.85	165	660	234.61	-219.51	-15.10	234.61
37.52	168	672	198.84	-248.38	49.54	248.38
38.19	171	684	161.73	-265.18	103.46	265.18
38.86	174	696	122.73	-269.03	146.30	269.03
39.53	177	708	74.27	-257.20	182.92	257.20
40.2	180	720	13.48	-233.87	220.39	233.87

B. Tabel Hasil Simulasi *Open Circuit* Generator Sinkron Magnet Permanen Jenis Neodymium Iron Boron 48/11

t (ms)	Mekanikal (deg)	Elektrikal (deg)	Voc (Volt)
0	0	0	0
0.67	3	12	143.143
1.34	6	24	212.7567
2.01	9	36	241.471
2.68	12	48	244.9923
3.35	15	60	235.1772
4.02	18	72	223.1525
4.69	21	84	225.5901
5.36	24	96	246.4365
6.03	27	108	246.5404
6.7	30	120	235.3894
7.37	33	132	223.2121
8.04	36	144	226.3664
8.71	39	156	246.6199
9.38	42	168	246.3816
10.05	45	180	234.9875
10.72	48	192	223.0772
11.39	51	204	227.0783
12.06	54	216	246.7675
12.73	57	228	246.1985
13.4	60	240	234.5632
14.07	63	252	222.9165
14.74	66	264	227.7766
15.41	69	276	246.8863
16.08	72	288	245.9907
16.75	75	300	234.1152
17.42	78	312	222.7532
18.09	81	324	228.5034
18.76	84	336	247.0256
19.43	87	348	245.8156
20.1	90	360	233.6929
20.77	93	372	222.5965
21.44	96	384	229.1946
22.11	99	396	247.142
22.78	102	408	245.6178
23.45	105	420	233.2467
24.12	108	432	222.4144
24.79	111	444	229.8605

25.46	114	456	247.2324
26.13	117	468	245.3951
26.8	120	480	232.7784
27.47	123	492	222.2296
28.14	126	504	230.5491
28.81	129	516	247.3584
29.48	132	528	245.2062
30.15	135	540	232.3379
30.82	138	552	222.0525
31.49	141	564	231.2051
32.16	144	576	247.4488
32.83	147	588	244.9933
33.5	150	600	231.8707
34.17	153	612	221.8469
34.84	156	624	231.8334
35.51	159	636	247.5126
36.18	162	648	244.7596
36.85	165	660	231.3817
37.52	168	672	221.6442
38.19	171	684	232.4871
38.86	174	696	247.6056
39.53	177	708	244.5551
40.2	180	720	230.9173

C. Tabel Hasil Simulasi Berbeban Generator Sinkron Magnet Permanen Jenis Neodymium Iron Boron 48/11 pada Beban R (100 Ω)

t (ms)	Mekanikal (deg)	Elektrikal (deg)	Torsi (Nm)	Arus (Amp AC)			Tegangan *Line* (Volt AC)			Ipeak (Amp AC)	Vpeak (Volt AC)	Daya (Watt AC)		IDC (Amp DC)	VDC (Volt DC)	Daya (Watt DC)	
				U	V	W	UV	VW	UW			In	Out			In	Out
0.00	0.00	0.00	0.00	0.00	0.00	0.00	0.00	0.00	0.00	0.00	0.00	0.39	0.00	0.00	0.00	0.39	0.00
0.67	3.00	12.00	4.70	-1.12	-0.51	1.63	0.00	-155.44	155.44	1.63	155.44	369.43	253.85	1.54	154.03	369.43	237.24
1.34	6.00	24.00	7.20	-2.08	-0.02	2.10	-38.69	-161.95	200.64	2.10	200.64	565.77	422.25	1.99	199.22	565.77	396.90
2.01	9.00	36.00	8.36	-2.47	0.01	2.46	-140.65	-95.41	236.06	2.47	236.06	656.82	582.70	2.35	234.63	656.82	550.53
2.68	12.00	48.00	8.47	-2.57	0.03	2.54	-187.95	-56.62	244.57	2.57	244.57	665.07	627.70	2.43	243.15	665.07	591.22
3.35	15.00	60.00	7.40	-2.53	0.08	2.44	-239.59	-0.01	239.60	2.53	239.60	581.29	605.01	2.38	238.18	581.29	567.28
4.02	18.00	72.00	6.11	-2.41	0.40	2.01	-228.75	-0.01	228.76	2.41	228.76	480.22	551.37	2.27	227.34	480.22	516.83
4.69	21.00	84.00	6.50	-2.29	1.29	1.00	-217.38	0.00	217.38	2.29	217.38	510.49	497.72	2.16	215.96	510.49	466.40
5.36	24.00	96.00	7.59	-2.24	2.24	0.00	-214.68	102.76	111.93	2.24	214.68	595.82	480.98	2.13	213.26	595.82	454.80
6.03	27.00	108.00	8.17	-2.45	2.48	-0.03	-236.07	188.21	47.86	2.48	236.07	641.99	585.01	2.35	234.65	641.99	550.59
6.70	30.00	120.00	7.26	-2.40	2.49	-0.09	-236.20	236.19	0.01	2.49	236.20	570.48	587.93	2.35	234.78	570.48	551.21
7.37	33.00	132.00	6.10	-1.96	2.40	-0.43	-227.60	227.60	0.01	2.40	227.60	479.22	545.79	2.26	226.18	479.22	511.59
8.04	36.00	144.00	6.55	-0.95	2.28	-1.34	-216.70	216.70	0.00	2.28	216.70	514.15	494.60	2.15	215.28	514.15	463.46
8.71	39.00	156.00	7.64	0.00	2.26	-2.26	-99.54	216.39	-116.85	2.26	216.39	600.29	488.87	2.15	214.97	600.29	462.12
9.38	42.00	168.00	8.18	0.03	2.46	-2.48	-48.25	236.54	-188.30	2.48	236.54	642.46	587.34	2.35	235.12	642.46	552.80
10.05	45.00	180.00	7.23	0.10	2.39	-2.49	-0.01	236.33	-236.32	2.49	236.33	568.15	588.57	2.35	234.91	568.15	551.82
10.72	48.00	192.00	6.10	0.46	1.94	-2.40	-0.01	227.54	-227.53	2.40	227.54	479.33	545.48	2.26	226.12	479.33	511.29
11.39	51.00	204.00	6.59	1.37	0.91	-2.28	0.00	216.35	-216.35	2.28	216.35	517.31	493.01	2.15	214.94	517.31	461.97
12.06	54.00	216.00	7.68	2.27	-0.01	-2.27	126.98	90.54	-217.52	2.27	217.52	602.93	494.41	2.16	216.10	602.93	466.98
12.73	57.00	228.00	8.18	2.49	-0.03	-2.46	188.74	48.04	-236.78	2.49	236.78	642.16	588.54	2.35	235.36	642.16	553.92
13.40	60.00	240.00	7.20	2.49	-0.11	-2.38	236.32	0.01	-236.34	2.49	236.34	565.47	588.60	2.35	234.91	565.47	551.84
14.07	63.00	252.00	6.10	2.40	-0.48	-1.92	227.41	0.01	-227.42	2.40	227.42	479.40	544.88	2.26	225.99	479.40	510.73
14.74	66.00	264.00	6.62	2.27	-1.40	-0.87	215.99	0.00	-215.98	2.27	215.99	519.69	491.33	2.15	214.57	519.69	460.39

15.41	69.00	276.00	7.71	2.28	-2.29	0.01	218.62	-137.07	-81.56	2.29	218.62	605.77	499.88	2.17	217.20	605.77	471.77
16.08	72.00	288.00	8.17	2.46	-2.49	0.03	237.00	-189.19	-47.80	2.49	237.00	642.04	589.63	2.36	235.57	642.04	554.94
16.75	75.00	300.00	7.17	2.37	-2.49	0.12	236.33	-236.32	-0.01	2.49	236.33	563.06	588.56	2.35	234.90	563.06	551.80
17.42	78.00	312.00	6.11	1.89	-2.39	0.50	227.29	-227.28	-0.01	2.39	227.29	479.81	544.29	2.26	225.87	479.81	510.17
18.09	81.00	324.00	6.65	0.84	-2.27	1.43	215.62	-215.62	0.00	2.27	215.62	522.24	489.68	2.14	214.20	522.24	458.83
18.76	84.00	336.00	7.76	-0.02	-2.29	2.30	72.38	-219.77	147.39	2.30	219.77	609.32	505.58	2.18	218.35	609.32	476.77
19.43	87.00	348.00	8.17	-0.03	-2.46	2.49	47.59	-237.25	189.66	2.49	237.25	641.84	590.91	2.36	235.82	641.84	556.13
20.10	90.00	360.00	7.14	-0.12	-2.37	2.49	0.01	-236.34	236.33	2.49	236.34	560.48	588.62	2.35	234.92	560.48	551.86
20.77	93.00	372.00	6.11	-0.53	-1.87	2.39	0.01	-227.17	227.17	2.39	227.17	479.98	543.72	2.26	225.75	479.98	509.64
21.44	96.00	384.00	6.68	-1.47	-0.80	2.27	0.00	-215.25	215.26	2.27	215.26	524.39	488.02	2.14	213.84	524.39	457.27
22.11	99.00	396.00	7.79	-2.31	0.02	2.30	-157.45	-63.43	220.88	2.31	220.88	612.06	511.10	2.19	219.45	612.06	481.60
22.78	102.00	408.00	8.16	-2.49	0.03	2.46	-190.15	-47.32	237.47	2.49	237.47	641.01	592.04	2.36	236.05	641.01	557.19
23.45	105.00	420.00	7.10	-2.49	0.13	2.36	-236.31	-0.01	236.33	2.49	236.33	557.85	588.54	2.35	234.90	557.85	551.79
24.12	108.00	432.00	6.11	-2.39	0.55	1.84	-227.02	-0.01	227.03	2.39	227.03	480.26	543.01	2.26	225.60	480.26	508.97
24.79	111.00	444.00	6.71	-2.26	1.50	0.76	-214.87	0.00	214.87	2.26	214.87	526.63	486.26	2.13	213.45	526.63	455.62
25.46	114.00	456.00	7.83	-2.30	2.33	-0.02	-221.96	167.46	54.50	2.33	221.96	614.90	516.56	2.21	220.54	614.90	486.37
26.13	117.00	468.00	8.16	-2.47	2.50	-0.03	-237.67	190.65	47.03	2.50	237.67	640.87	593.06	2.36	236.25	640.87	558.14
26.80	120.00	480.00	7.07	-2.35	2.49	-0.14	-236.29	236.28	0.01	2.49	236.29	555.55	588.37	2.35	234.87	555.55	551.63
27.47	123.00	492.00	6.12	-1.82	2.39	-0.57	-226.88	226.87	0.01	2.39	226.88	480.88	542.29	2.25	225.46	480.88	508.30
28.14	126.00	504.00	6.74	-0.73	2.26	-1.53	-214.48	214.48	0.00	2.26	214.48	529.06	484.50	2.13	213.07	529.06	453.97
28.81	129.00	516.00	7.87	0.03	2.31	-2.34	-45.46	223.10	-177.64	2.34	223.10	617.84	522.29	2.22	221.67	617.84	491.39
29.48	132.00	528.00	8.16	0.03	2.47	-2.50	-46.78	237.91	-191.14	2.50	237.91	640.54	594.27	2.36	236.49	640.54	559.27
30.15	135.00	540.00	7.03	0.15	2.34	-2.49	-0.01	236.28	-236.27	2.49	236.28	552.01	588.30	2.35	234.85	552.01	551.56
30.82	138.00	552.00	6.13	0.60	1.79	-2.39	-0.01	226.73	-226.73	2.39	226.73	481.32	541.61	2.25	225.31	481.32	507.66
31.49	141.00	564.00	6.76	1.56	0.69	-2.25	0.00	214.09	-214.10	2.25	214.10	531.16	482.75	2.13	212.68	531.16	452.32
32.16	144.00	576.00	7.90	2.35	-0.03	-2.32	187.59	36.59	-224.18	2.35	224.18	620.42	527.78	2.23	222.75	620.42	496.19
32.83	147.00	588.00	8.15	2.50	-0.03	-2.47	191.65	46.47	-238.12	2.50	238.12	639.90	595.32	2.37	236.69	639.90	560.24

33.50	150.00	600.00	7.00	2.49	-0.15	-2.33	236.22	0.01	-236.23	2.49	236.23	549.39	588.07	2.35	234.81	549.39	551.35
34.17	153.00	612.00	6.14	2.39	-0.62	-1.77	226.55	0.01	-226.56	2.39	226.56	482.32	540.76	2.25	225.14	482.32	506.86
34.84	156.00	624.00	6.79	2.25	-1.59	-0.66	213.68	0.00	-213.68	2.25	213.68	533.39	480.88	2.12	212.26	533.39	450.56
35.51	159.00	636.00	7.93	2.33	-2.37	0.03	225.23	-197.47	-27.76	2.37	225.23	623.17	533.18	2.24	223.81	623.17	500.90
36.18	162.00	648.00	8.14	2.47	-2.50	0.03	238.31	-192.13	-46.18	2.50	238.31	639.41	596.27	2.37	236.88	639.41	561.13
36.85	165.00	660.00	6.96	2.33	-2.49	0.16	236.17	-236.16	-0.01	2.49	236.17	547.02	587.76	2.35	234.75	547.02	551.06
37.52	168.00	672.00	6.15	1.74	-2.39	0.64	226.38	-226.38	-0.01	2.39	226.38	483.10	539.94	2.25	224.96	483.10	506.09
38.19	171.00	684.00	6.82	0.62	-2.25	1.63	213.27	-213.27	0.01	2.25	213.27	535.89	479.03	2.12	211.85	535.89	448.82
38.86	174.00	696.00	7.97	-0.04	-2.34	2.38	18.79	-226.33	207.55	2.38	226.33	626.05	538.84	2.25	224.91	626.05	505.85
39.53	177.00	708.00	8.13	-0.03	-2.48	2.50	45.88	-238.53	192.64	2.50	238.53	638.76	597.40	2.37	237.10	638.76	562.17
40.20	180.00	720.00	6.93	-0.17	-2.32	2.49	0.01	-236.12	236.11	2.49	236.12	544.41	587.51	2.35	234.70	544.41	550.82

D. Tabel Perbandingan Arus DC, Tegangan DC, dan Daya Pada Simulasi Berbeban Generator Sinkron Magnet Permanen Jenis Neodymium Iron Boron 48/11 dengan Beban R (100Ω) dan Beban L (0,4 mH, 1 mH, 20 mH).

t (ms)	Mekanikal (deg)	Elektrikal (deg)	IDC (Ampere DC)			VDC (Volt DC)			Daya *Output* (Watt)		
			0,4 mH	1 mH	20 mH	0,4 mH	1 mH	20 mH	0,4 mH	1 mH	20 mH
0.00	0.00	0.00	0.00	0.00	0.00	0.00	0.00	0.00	0.00	0.00	0.00
0.67	3.00	12.00	1.53	1.53	1.28	153.86	153.63	153.89	236.07	234.35	197.44
1.34	6.00	24.00	1.99	1.99	1.84	199.12	198.97	198.00	396.13	394.98	364.65
2.01	9.00	36.00	2.34	2.34	2.22	234.53	234.38	230.09	549.76	548.60	511.86
2.68	12.00	48.00	2.43	2.43	2.36	243.02	242.82	236.94	590.63	589.73	560.03
3.35	15.00	60.00	2.38	2.38	2.36	238.08	237.94	233.68	567.01	566.60	551.51
4.02	18.00	72.00	2.27	2.27	2.28	227.33	227.32	226.24	516.90	516.98	516.36
4.69	21.00	84.00	2.16	2.16	2.19	215.91	215.82	213.49	466.42	466.45	466.55
5.36	24.00	96.00	2.13	2.13	2.14	213.41	213.63	219.26	455.15	455.67	470.13
6.03	27.00	108.00	2.35	2.34	2.32	234.61	234.55	233.92	550.36	550.03	543.37
6.70	30.00	120.00	2.35	2.35	2.34	234.71	234.60	232.11	551.01	550.71	543.02
7.37	33.00	132.00	2.26	2.26	2.27	226.17	226.15	225.41	511.62	511.68	512.33
8.04	36.00	144.00	2.15	2.15	2.18	215.22	215.13	212.84	463.47	463.48	463.73
8.71	39.00	156.00	2.15	2.15	2.15	215.15	215.43	221.96	462.52	463.11	478.16
9.38	42.00	168.00	2.35	2.35	2.33	235.07	235.01	234.02	552.56	552.20	544.43
10.05	45.00	180.00	2.35	2.35	2.34	234.84	234.74	232.26	551.62	551.33	543.63
10.72	48.00	192.00	2.26	2.26	2.27	226.10	226.08	225.26	511.33	511.38	511.91
11.39	51.00	204.00	2.15	2.15	2.18	214.87	214.78	212.45	461.98	461.99	462.30
12.06	54.00	216.00	2.16	2.16	2.16	216.31	216.62	224.11	467.42	468.07	484.68
12.73	57.00	228.00	2.35	2.35	2.33	235.31	235.24	234.06	553.67	553.31	545.13
13.40	60.00	240.00	2.35	2.35	2.34	234.84	234.74	232.34	551.65	551.37	543.89
14.07	63.00	252.00	2.26	2.26	2.27	225.98	225.95	225.07	510.77	510.82	511.30
14.74	66.00	264.00	2.15	2.15	2.17	214.51	214.42	212.06	460.40	460.41	460.80
15.41	69.00	276.00	2.17	2.17	2.17	217.44	217.79	226.24	472.25	472.96	491.13
16.08	72.00	288.00	2.36	2.35	2.33	235.52	235.45	234.07	554.68	554.31	545.72
16.75	75.00	300.00	2.35	2.35	2.34	234.84	234.74	232.42	551.62	551.35	544.11
17.42	78.00	312.00	2.26	2.26	2.27	225.85	225.83	224.87	510.21	510.26	510.68
18.09	81.00	324.00	2.14	2.14	2.17	214.14	214.05	211.66	458.84	458.86	459.30
18.76	84.00	336.00	2.18	2.18	2.18	218.61	219.00	228.44	477.29	478.07	497.84
19.43	87.00	348.00	2.36	2.36	2.33	235.77	235.70	234.11	555.87	555.49	546.45
20.10	90.00	360.00	2.35	2.35	2.34	234.85	234.76	232.50	551.68	551.42	544.41
20.77	93.00	372.00	2.26	2.26	2.27	225.73	225.70	224.69	509.67	509.72	510.09
21.44	96.00	384.00	2.14	2.14	2.17	213.78	213.68	211.27	457.28	457.30	457.82
22.11	99.00	396.00	2.19	2.19	2.19	219.74	220.17	230.57	482.17	483.01	504.37
22.78	102.00	408.00	2.36	2.36	2.34	235.99	235.91	234.14	556.92	556.53	547.07
23.45	105.00	420.00	2.35	2.35	2.34	234.84	234.75	232.56	551.62	551.37	544.58
24.12	108.00	432.00	2.26	2.26	2.27	225.58	225.55	224.47	509.00	509.05	509.37

24.79	111.00	444.00	2.14	2.14	2.16	213.39	213.29	210.86	455.63	455.65	456.25
25.46	114.00	456.00	2.21	2.20	2.20	220.85	221.32	232.69	486.98	487.89	510.83
26.13	117.00	468.00	2.36	2.36	2.34	236.19	236.11	234.14	557.87	557.47	547.59
26.80	120.00	480.00	2.35	2.35	2.34	234.81	234.72	232.60	551.47	551.22	544.66
27.47	123.00	492.00	2.25	2.26	2.27	225.43	225.40	224.26	508.33	508.37	508.64
28.14	126.00	504.00	2.13	2.13	2.16	213.00	212.91	210.44	453.98	454.00	454.65
28.81	129.00	516.00	2.22	2.22	2.20	222.02	222.52	234.91	492.05	493.03	517.66
29.48	132.00	528.00	2.36	2.36	2.34	236.43	236.34	234.17	558.99	558.58	548.27
30.15	135.00	540.00	2.35	2.35	2.34	234.80	234.71	232.65	551.41	551.17	544.82
30.82	138.00	552.00	2.25	2.25	2.27	225.29	225.25	224.05	507.68	507.73	507.96
31.49	141.00	564.00	2.13	2.13	2.16	212.61	212.51	210.01	452.33	452.35	453.06
32.16	144.00	576.00	2.23	2.23	2.21	223.12	223.67	237.02	496.89	497.93	524.18
32.83	147.00	588.00	2.37	2.37	2.34	236.63	236.54	234.17	559.96	559.55	548.81
33.50	150.00	600.00	2.35	2.35	2.34	234.75	234.67	232.67	551.20	550.97	544.83
34.17	153.00	612.00	2.25	2.25	2.27	225.11	225.07	223.82	506.89	506.93	507.12
34.84	156.00	624.00	2.12	2.12	2.15	212.20	212.10	209.56	450.58	450.60	451.36
35.51	159.00	636.00	2.24	2.24	2.22	224.20	224.79	239.10	501.65	502.75	530.62
36.18	162.00	648.00	2.37	2.37	2.35	236.82	236.72	234.17	560.84	560.42	549.28
36.85	165.00	660.00	2.35	2.35	2.34	234.69	234.61	232.68	550.91	550.69	544.77
37.52	168.00	672.00	2.25	2.25	2.26	224.94	224.90	223.59	506.11	506.15	506.31
38.19	171.00	684.00	2.12	2.12	2.15	211.79	211.69	209.12	448.84	448.86	449.68
38.86	174.00	696.00	2.25	2.25	2.23	225.33	225.96	241.27	506.64	507.82	537.35
39.53	177.00	708.00	2.37	2.37	2.35	237.03	236.93	234.19	561.88	561.45	549.88
40.20	180.00	720.00	2.35	2.35	2.34	234.64	234.57	232.68	550.68	550.47	544.74

E. Tabel Perbandingan Hasil Simulasi Berbeban Generator Sinkron Magnet Permanen Jenis Neodymium Iron Boron 48/11 pada Beban R dan L dengan Penambahan Filter C

1. Pada Beban R = 100 Ω

t (ms)	Mekanikal (deg)	Elekrikal (deg)	IDC (Amp DC)			VDC (Volt DC)			Daya *Output* (Watt)		
			47 µF	470 µF	680 µF	47 µF	470 µF	680 µF	47 µF	470 µF	680 µF
0	0	0	0.00	0.00	0.00	0.00	0.00	0.00	0.00	0.00	0.00
0.67	3	12	0.17	0.02	0.01	17.24	1.86	1.29	2.97	0.03	0.02
1.34	6	24	0.63	0.07	0.05	63.02	7.35	5.11	39.72	0.54	0.26
2.01	9	36	1.25	0.16	0.11	124.97	16.23	11.32	156.19	2.63	1.28
2.68	12	48	1.88	0.28	0.20	187.64	27.91	19.57	352.09	7.79	3.83
3.35	15	60	2.44	0.41	0.29	244.21	41.45	29.26	596.40	17.18	8.56
4.02	18	72	2.90	0.57	0.40	290.01	56.51	40.11	841.05	31.94	16.09
4.69	21	84	3.19	0.74	0.53	318.91	74.35	53.12	1017.00	55.28	28.22
5.36	24	96	3.26	0.94	0.68	325.57	94.45	68.03	1059.96	89.21	46.29
6.03	27	108	3.09	1.16	0.84	308.83	115.75	84.17	953.75	133.97	70.84
6.7	30	120	2.83	1.37	1.01	283.11	136.87	100.64	801.53	187.33	101.29
7.37	33	132	2.54	1.56	1.17	253.90	156.49	116.59	644.66	244.90	135.92
8.04	36	144	2.25	1.73	1.31	225.24	173.47	131.21	507.33	300.92	172.16
8.71	39	156	2.05	1.89	1.44	205.01	188.98	144.50	420.28	357.13	208.79
9.38	42	168	1.94	2.04	1.58	194.12	204.02	158.14	376.82	416.24	250.08
10.05	45	180	1.91	2.17	1.71	190.96	217.32	171.16	364.67	472.29	292.95
10.72	48	192	1.94	2.28	1.83	193.59	227.68	182.68	374.75	518.38	333.73
11.39	51	204	2.00	2.35	1.92	199.54	234.82	191.98	398.15	551.40	368.57
12.06	54	216	2.06	2.41	1.99	206.06	241.04	199.37	424.59	581.02	397.47
12.73	57	228	2.15	2.46	2.07	215.37	245.93	206.56	463.86	604.80	426.67
13.4	60	240	2.26	2.49	2.13	226.43	248.83	212.63	512.72	619.16	452.11

14.07	63	252	2.36	2.51	2.17	236.03	250.75	217.00	557.10	628.74	470.87
14.74	66	264	2.42	2.52	2.21	241.54	252.11	220.53	583.42	635.57	486.33
15.41	69	276	2.40	2.53	2.24	240.44	252.56	223.85	578.14	637.88	501.09
16.08	72	288	2.37	2.52	2.26	237.10	252.15	226.48	562.14	635.79	512.92
16.75	75	300	2.35	2.52	2.28	234.82	251.56	228.23	551.39	632.84	520.88
17.42	78	312	2.32	2.51	2.30	231.85	250.60	230.07	537.54	628.00	529.34
18.09	81	324	2.27	2.49	2.32	227.00	249.09	231.76	515.30	620.45	537.11
18.76	84	336	2.20	2.47	2.33	220.46	247.22	233.05	486.04	611.17	543.10
19.43	87	348	2.18	2.46	2.34	218.37	245.52	233.94	476.86	602.80	547.26
20.1	90	360	2.19	2.44	2.35	219.45	243.84	234.83	481.58	594.57	551.45
20.77	93	372	2.22	2.42	2.36	221.57	241.94	235.60	490.95	585.37	555.08
21.44	96	384	2.23	2.40	2.36	222.68	239.75	236.16	495.86	574.81	557.73
22.11	99	396	2.21	2.38	2.36	221.48	237.74	236.30	490.52	565.18	558.37
22.78	102	408	2.23	2.36	2.36	222.73	236.02	236.21	496.10	557.07	557.95
23.45	105	420	2.26	2.34	2.36	226.03	234.45	236.17	510.88	549.67	557.74
24.12	108	432	2.29	2.33	2.36	229.06	232.80	236.03	524.68	541.98	557.08
24.79	111	444	2.30	2.31	2.36	229.76	230.99	235.66	527.92	533.54	555.36
25.46	114	456	2.27	2.29	2.35	227.01	229.41	235.02	515.33	526.31	552.34
26.13	117	468	2.26	2.28	2.35	226.11	228.23	234.54	511.24	520.89	550.07
26.8	120	480	2.27	2.27	2.34	227.13	227.26	234.13	515.88	516.48	548.15
27.47	123	492	2.28	2.26	2.34	228.05	226.32	233.66	520.09	512.20	545.96
28.14	126	504	2.27	2.25	2.33	227.02	225.22	232.98	515.40	507.23	542.80
28.81	129	516	2.23	2.24	2.32	223.40	224.23	232.21	499.09	502.79	539.23
29.48	132	528	2.23	2.24	2.32	222.91	223.66	231.67	496.91	500.25	536.70
30.15	135	540	2.25	2.23	2.31	224.65	223.35	231.22	504.67	498.83	534.63
30.82	138	552	2.27	2.23	2.31	226.52	223.10	230.74	513.13	497.72	532.41
31.49	141	564	2.27	2.23	2.30	226.51	222.73	230.09	513.05	496.08	529.39

32.16	144	576	2.24	2.22	2.29	223.75	222.22	229.39	500.63	493.81	526.19
32.83	147	588	2.24	2.22	2.29	223.86	222.12	228.93	501.15	493.37	524.10
33.5	150	600	2.26	2.22	2.29	225.95	222.27	228.59	510.51	494.03	522.55
34.17	153	612	2.28	2.22	2.28	227.91	222.50	228.25	519.41	495.04	520.97
34.84	156	624	2.28	2.23	2.28	227.70	222.61	227.75	518.46	495.53	518.71
35.51	159	636	2.25	2.22	2.27	224.57	222.47	227.19	504.33	494.93	516.15
36.18	162	648	2.24	2.23	2.27	224.38	222.62	226.88	503.46	495.62	514.74
36.85	165	660	2.26	2.23	2.27	226.10	223.00	226.70	511.20	497.30	513.92
37.52	168	672	2.28	2.23	2.27	227.71	223.44	226.52	518.50	499.24	513.14
38.19	171	684	2.27	2.24	2.26	227.17	223.73	226.22	516.04	500.57	511.75
38.86	174	696	2.24	2.24	2.26	223.88	223.73	225.79	501.24	500.57	509.83
39.53	177	708	2.24	2.24	2.26	223.87	223.94	225.62	501.19	501.49	509.07
40.2	180	720	2.26	2.24	2.26	225.76	224.35	225.59	509.70	503.31	508.91

2. Pada Beban R = 100 Ω, dan L = 0,4 mH

t (ms)	Mekanikal (deg)	Elektrikal (deg)	IDC (Amp DC)			VDC (Volt DC)			Daya *Output* (Watt)		
			47 µF	470 µF	680 µF	47 µF	470 µF	680 µF	47 µF	470 µF	680 µF
0	0	0	0.00	0.00	0.00	0.00	0.00	0.00	0.00	0.00	0.00
0.67	3	12	0.17	0.02	0.01	17.25	1.86	1.29	2.94	0.03	0.02
1.34	6	24	0.63	0.07	0.05	63.06	7.35	5.11	39.56	0.54	0.26
2.01	9	36	1.25	0.16	0.11	125.05	16.23	11.32	155.89	2.62	1.28
2.68	12	48	1.87	0.28	0.20	187.74	27.91	19.57	351.78	7.77	3.82
3.35	15	60	2.44	0.41	0.29	244.31	41.46	29.26	596.11	17.15	8.54
4.02	18	72	2.90	0.56	0.40	290.09	56.52	40.11	840.87	31.89	16.06
4.69	21	84	3.19	0.74	0.53	318.95	74.35	53.13	1016.93	55.20	28.18
5.36	24	96	3.26	0.94	0.68	325.56	94.46	68.04	1059.99	89.10	46.23
6.03	27	108	3.09	1.16	0.84	308.76	115.75	84.17	953.75	133.84	70.77
6.7	30	120	2.83	1.37	1.01	283.01	136.88	100.65	801.43	187.19	101.20
7.37	33	132	2.54	1.56	1.16	253.79	156.50	116.59	644.53	244.75	135.83
8.04	36	144	2.25	1.73	1.31	225.13	173.48	131.22	507.15	300.80	172.07
8.71	39	156	2.05	1.89	1.44	204.92	188.99	144.50	420.09	357.00	208.69
9.38	42	168	1.94	2.04	1.58	194.06	204.03	158.15	376.68	416.11	249.97
10.05	45	180	1.91	2.17	1.71	190.95	217.33	171.17	364.62	472.18	292.85
10.72	48	192	1.94	2.28	1.83	193.62	227.69	182.69	374.81	518.31	333.65
11.39	51	204	2.00	2.35	1.92	199.60	234.83	191.99	398.33	551.35	368.51
12.06	54	216	2.06	2.41	1.99	206.14	241.05	199.37	424.83	580.98	397.41
12.73	57	228	2.15	2.46	2.07	215.45	245.93	206.57	464.05	604.78	426.61
13.4	60	240	2.26	2.49	2.13	226.50	248.84	212.63	512.87	619.17	452.07
14.07	63	252	2.36	2.51	2.17	236.08	250.76	217.00	557.21	628.76	470.85
14.74	66	264	2.42	2.52	2.21	241.56	252.11	220.53	583.47	635.60	486.31

15.41	69	276	2.40	2.53	2.24	240.43	252.57	223.86	578.15	637.92	501.07
16.08	72	288	2.37	2.52	2.26	237.07	252.16	226.48	562.04	635.84	512.91
16.75	75	300	2.35	2.52	2.28	234.78	251.57	228.23	551.23	632.90	520.86
17.42	78	312	2.32	2.51	2.30	231.81	250.61	230.08	537.40	628.06	529.33
18.09	81	324	2.27	2.49	2.32	226.96	249.10	231.76	515.20	620.52	537.11
18.76	84	336	2.20	2.47	2.33	220.43	247.23	233.05	485.95	611.23	543.10
19.43	87	348	2.18	2.46	2.34	218.35	245.53	233.94	476.78	602.87	547.26
20.1	90	360	2.19	2.44	2.35	219.45	243.84	234.83	481.54	594.63	551.45
20.77	93	372	2.22	2.42	2.36	221.59	241.95	235.61	490.97	585.43	555.09
21.44	96	384	2.23	2.40	2.36	222.70	239.76	236.17	495.97	574.87	557.74
22.11	99	396	2.22	2.38	2.36	221.50	237.74	236.30	490.64	565.24	558.39
22.78	102	408	2.23	2.36	2.36	222.76	236.03	236.21	496.16	557.12	557.96
23.45	105	420	2.26	2.34	2.36	226.05	234.45	236.17	510.92	549.71	557.75
24.12	108	432	2.29	2.33	2.36	229.07	232.81	236.03	524.71	542.02	557.10
24.79	111	444	2.30	2.31	2.36	229.77	230.99	235.66	527.96	533.58	555.38
25.46	114	456	2.27	2.29	2.35	227.00	229.42	235.02	515.34	526.34	552.36
26.13	117	468	2.26	2.28	2.35	226.10	228.23	234.54	511.18	520.91	550.09
26.8	120	480	2.27	2.27	2.34	227.12	227.26	234.13	515.81	516.50	548.17
27.47	123	492	2.28	2.26	2.34	228.04	226.32	233.66	520.04	512.21	545.97
28.14	126	504	2.27	2.25	2.33	227.01	225.22	232.98	515.39	507.25	542.82
28.81	129	516	2.23	2.24	2.32	223.39	224.23	232.22	499.08	502.80	539.25
29.48	132	528	2.23	2.24	2.32	222.91	223.66	231.67	496.87	500.26	536.71
30.15	135	540	2.25	2.23	2.31	224.65	223.34	231.22	504.64	498.83	534.64
30.82	138	552	2.27	2.23	2.31	226.53	223.10	230.74	513.14	497.73	532.43
31.49	141	564	2.27	2.23	2.30	226.51	222.73	230.09	513.11	496.08	529.41
32.16	144	576	2.24	2.22	2.29	223.75	222.22	229.39	500.68	493.81	526.20
32.83	147	588	2.24	2.22	2.29	223.87	222.12	228.93	501.15	493.36	524.10

33.5	150	600	2.26	2.22	2.29	225.95	222.27	228.59	510.50	494.02	522.56
34.17	153	612	2.28	2.22	2.28	227.91	222.49	228.25	519.41	495.03	520.98
34.84	156	624	2.28	2.23	2.28	227.70	222.60	227.75	518.50	495.53	518.72
35.51	159	636	2.25	2.22	2.27	224.57	222.47	227.19	504.34	494.92	516.15
36.18	162	648	2.24	2.23	2.27	224.38	222.62	226.88	503.43	495.61	514.74
36.85	165	660	2.26	2.23	2.27	226.10	223.00	226.70	511.16	497.29	513.92
37.52	168	672	2.28	2.23	2.27	227.71	223.44	226.52	518.48	499.23	513.14
38.19	171	684	2.27	2.24	2.26	227.16	223.73	226.22	516.07	500.56	511.75
38.86	174	696	2.24	2.24	2.26	223.88	223.73	225.79	501.25	500.56	509.83
39.53	177	708	2.24	2.24	2.26	223.87	223.94	225.62	501.16	501.49	509.07
40.2	180	720	2.26	2.24	2.26	225.76	224.35	225.59	509.67	503.30	508.91

3. Pada Beban R = 100 Ω, dan L = 1 mH

t (ms)	Mekanikal (deg)	Elektrikal (deg)	I_{DC} (Amp DC)			V_{DC} (Volt DC)			Daya *Output* (Watt)		
			47 µF	470 µF	680 µF	47 µF	470 µF	680 µF	47 µF	470 µF	680 µF
0	0	0	0.00	0.00	0.00	0.00	0.00	0.00	0.00	0.00	0.00
0.67	3	12	0.17	0.02	0.01	17.27	1.86	1.29	2.90	0.03	0.02
1.34	6	24	0.62	0.07	0.05	63.13	7.35	5.11	39.32	0.53	0.26
2.01	9	36	1.24	0.16	0.11	125.17	16.23	11.32	155.44	2.61	1.27
2.68	12	48	1.87	0.28	0.19	187.88	27.92	19.57	351.30	7.74	3.81
3.35	15	60	2.44	0.41	0.29	244.46	41.46	29.26	595.68	17.10	8.52
4.02	18	72	2.90	0.56	0.40	290.22	56.52	40.11	840.59	31.81	16.02
4.69	21	84	3.19	0.74	0.53	319.02	74.36	53.13	1016.83	55.08	28.12
5.36	24	96	3.26	0.94	0.68	325.54	94.47	68.04	1060.04	88.94	46.14
6.03	27	108	3.09	1.15	0.84	308.65	115.77	84.18	953.75	133.65	70.65
6.7	30	120	2.83	1.37	1.00	282.86	136.89	100.65	801.28	186.97	101.07
7.37	33	132	2.54	1.56	1.16	253.61	156.52	116.60	644.34	244.54	135.69
8.04	36	144	2.25	1.73	1.31	224.96	173.50	131.23	506.90	300.61	171.93
8.71	39	156	2.05	1.89	1.44	204.78	189.01	144.51	419.82	356.80	208.54
9.38	42	168	1.94	2.04	1.58	193.98	204.05	158.16	376.48	415.91	249.82
10.05	45	180	1.91	2.17	1.71	190.93	217.35	171.18	364.54	472.01	292.70
10.72	48	192	1.94	2.28	1.83	193.66	227.70	182.70	374.90	518.20	333.51
11.39	51	204	2.00	2.35	1.92	199.70	234.84	192.00	398.59	551.27	368.41
12.06	54	216	2.06	2.41	1.99	206.26	241.07	199.39	425.20	580.92	397.32
12.73	57	228	2.15	2.46	2.06	215.57	245.95	206.58	464.35	604.76	426.53
13.4	60	240	2.26	2.49	2.13	226.60	248.85	212.64	513.09	619.18	452.01
14.07	63	252	2.36	2.51	2.17	236.14	250.77	217.01	557.36	628.78	470.83
14.74	66	264	2.42	2.52	2.20	241.59	252.13	220.54	583.54	635.64	486.28

15.41	69	276	2.40	2.53	2.24	240.42	252.58	223.86	578.16	637.99	501.04
16.08	72	288	2.37	2.52	2.26	237.02	252.17	226.49	561.89	635.91	512.89
16.75	75	300	2.35	2.52	2.28	234.72	251.59	228.24	551.00	632.98	520.85
17.42	78	312	2.32	2.51	2.30	231.74	250.62	230.08	537.17	628.15	529.31
18.09	81	324	2.27	2.49	2.32	226.90	249.11	231.76	515.05	620.63	537.09
18.76	84	336	2.20	2.47	2.33	220.38	247.24	233.05	485.81	611.33	543.10
19.43	87	348	2.18	2.46	2.34	218.32	245.54	233.94	476.64	602.96	547.26
20.1	90	360	2.19	2.44	2.35	219.44	243.86	234.84	481.48	594.72	551.45
20.77	93	372	2.22	2.42	2.36	221.60	241.96	235.61	491.01	585.52	555.10
21.44	96	384	2.23	2.40	2.36	222.74	239.77	236.17	496.12	574.96	557.75
22.11	99	396	2.22	2.38	2.36	221.54	237.75	236.31	490.82	565.31	558.42
22.78	102	408	2.23	2.36	2.36	222.79	236.04	236.22	496.26	557.19	557.99
23.45	105	420	2.26	2.34	2.36	226.08	234.46	236.17	510.98	549.77	557.78
24.12	108	432	2.29	2.33	2.36	229.09	232.81	236.03	524.76	542.08	557.13
24.79	111	444	2.30	2.31	2.36	229.78	230.99	235.67	528.01	533.64	555.41
25.46	114	456	2.27	2.29	2.35	227.00	229.42	235.03	515.36	526.38	552.39
26.13	117	468	2.26	2.28	2.35	226.08	228.23	234.54	511.11	520.94	550.11
26.8	120	480	2.27	2.27	2.34	227.10	227.26	234.13	515.71	516.52	548.20
27.47	123	492	2.28	2.26	2.34	228.03	226.32	233.66	519.96	512.24	546.00
28.14	126	504	2.27	2.25	2.33	227.00	225.22	232.99	515.38	507.27	542.86
28.81	129	516	2.23	2.24	2.32	223.38	224.23	232.22	499.07	502.81	539.28
29.48	132	528	2.23	2.24	2.32	222.90	223.66	231.67	496.81	500.26	536.73
30.15	135	540	2.25	2.23	2.31	224.65	223.34	231.22	504.59	498.83	534.66
30.82	138	552	2.27	2.23	2.31	226.54	223.10	230.74	513.14	497.73	532.45
31.49	141	564	2.27	2.23	2.30	226.52	222.73	230.09	513.19	496.08	529.43
32.16	144	576	2.24	2.22	2.29	223.76	222.22	229.39	500.75	493.81	526.22
32.83	147	588	2.24	2.22	2.29	223.87	222.12	228.93	501.15	493.35	524.12

33.5	150	600	2.26	2.22	2.29	225.96	222.26	228.60	510.48	494.00	522.57
34.17	153	612	2.28	2.22	2.28	227.92	222.49	228.25	519.42	495.02	520.99
34.84	156	624	2.28	2.23	2.28	227.70	222.60	227.75	518.55	495.52	518.73
35.51	159	636	2.25	2.22	2.27	224.56	222.47	227.19	504.36	494.92	516.16
36.18	162	648	2.24	2.23	2.27	224.37	222.62	226.88	503.38	495.59	514.74
36.85	165	660	2.26	2.23	2.27	226.09	223.00	226.70	511.10	497.27	513.92
37.52	168	672	2.28	2.23	2.27	227.70	223.44	226.52	518.46	499.22	513.14
38.19	171	684	2.27	2.24	2.26	227.16	223.73	226.22	516.11	500.56	511.76
38.86	174	696	2.24	2.24	2.26	223.88	223.73	225.79	501.26	500.56	509.83
39.53	177	708	2.24	2.24	2.26	223.87	223.94	225.62	501.12	501.47	509.07
40.2	180	720	2.26	2.24	2.26	225.77	224.34	225.59	509.62	503.29	508.91

4. **Pada Beban R = 100 Ω, dan L = 20 mH**

t (ms)	Mekanikal (deg)	Elektrikal (deg)	IDC (Amp DC)			VDC (Volt DC)			Daya *Output* (Watt)		
			47 µF	470 µF	680 µF	47 µF	470 µF	680 µF	47 µF	470 µF	680 µF
0.00	0.00	0.00	0.00	0.00	0.00	0.00	0.00	0.00	0.00	0.00	0.00
0.67	3.00	12.00	0.11	0.01	0.01	17.65	1.87	1.29	1.88	0.02	0.01
1.34	6.00	24.00	0.49	0.06	0.04	64.80	7.37	5.12	31.88	0.41	0.20
2.01	9.00	36.00	1.09	0.13	0.09	128.45	16.28	11.35	139.85	2.19	1.06
2.68	12.00	48.00	1.74	0.24	0.17	192.31	28.01	19.62	333.70	6.82	3.34
3.35	15.00	60.00	2.33	0.37	0.26	249.33	41.60	29.33	580.42	15.58	7.73
4.02	18.00	72.00	2.82	0.52	0.37	294.53	56.72	40.21	830.34	29.53	14.82
4.69	21.00	84.00	3.15	0.69	0.49	321.66	74.61	53.26	1012.62	51.56	26.22
5.36	24.00	96.00	3.26	0.89	0.64	325.48	94.78	68.21	1060.70	84.02	43.41
6.03	27.00	108.00	3.13	1.10	0.80	305.87	116.14	84.38	956.41	127.43	67.08
6.70	30.00	120.00	2.87	1.31	0.96	278.43	137.32	100.89	798.79	179.95	96.82
7.37	33.00	132.00	2.57	1.51	1.12	248.19	156.98	116.87	638.69	237.42	131.07
8.04	36.00	144.00	2.28	1.69	1.27	219.56	173.99	131.52	500.03	294.21	167.34
8.71	39.00	156.00	2.05	1.85	1.41	200.28	189.52	144.82	411.39	350.44	203.98
9.38	42.00	168.00	1.93	2.00	1.54	191.12	204.57	158.49	369.42	409.41	244.72
10.05	45.00	180.00	1.90	2.14	1.68	190.11	217.86	171.53	361.18	466.29	287.65
10.72	48.00	192.00	1.93	2.25	1.80	194.93	228.19	183.06	376.60	514.14	329.02
11.39	51.00	204.00	2.00	2.33	1.90	202.73	235.29	192.36	406.10	548.90	364.97
12.06	54.00	216.00	2.08	2.40	1.98	210.18	241.51	199.75	437.11	578.91	394.64
12.73	57.00	228.00	2.16	2.45	2.05	219.28	246.36	206.92	474.56	603.64	423.81
13.40	60.00	240.00	2.27	2.48	2.11	229.75	249.25	212.97	520.67	619.34	449.91
14.07	63.00	252.00	2.36	2.51	2.16	238.34	251.19	217.31	562.37	629.59	469.64
14.74	66.00	264.00	2.42	2.52	2.20	242.46	252.56	220.81	585.73	636.92	485.31

15.41	69.00	276.00	2.41	2.53	2.23	239.94	253.01	224.10	578.41	639.98	500.05
16.08	72.00	288.00	2.37	2.53	2.26	235.65	252.60	226.68	558.20	638.43	512.24
16.75	75.00	300.00	2.34	2.52	2.28	232.81	252.02	228.40	543.85	635.61	520.52
17.42	78.00	312.00	2.31	2.51	2.30	229.66	251.05	230.24	529.73	631.07	528.85
18.09	81.00	324.00	2.26	2.50	2.31	224.95	249.53	231.92	509.50	623.89	536.72
18.76	84.00	336.00	2.20	2.48	2.33	218.78	247.64	233.19	482.35	614.63	542.97
19.43	87.00	348.00	2.17	2.46	2.34	217.34	245.91	234.08	472.70	605.97	547.32
20.10	90.00	360.00	2.19	2.45	2.35	219.25	244.20	234.98	479.15	597.59	551.53
20.77	93.00	372.00	2.21	2.43	2.36	222.18	242.27	235.76	491.68	588.38	555.30
21.44	96.00	384.00	2.24	2.41	2.36	223.86	240.04	236.32	500.36	577.79	558.13
22.11	99.00	396.00	2.23	2.39	2.36	222.82	237.99	236.46	497.26	567.79	559.11
22.78	102.00	408.00	2.23	2.37	2.36	223.89	236.24	236.37	500.15	559.29	558.77
23.45	105.00	420.00	2.26	2.35	2.36	226.97	234.63	236.32	512.92	551.64	558.52
24.12	108.00	432.00	2.29	2.33	2.36	229.70	232.95	236.18	525.95	543.84	557.93
24.79	111.00	444.00	2.30	2.32	2.36	229.98	231.09	235.81	529.20	535.32	556.35
25.46	114.00	456.00	2.28	2.30	2.35	226.72	229.49	235.16	516.36	527.71	553.44
26.13	117.00	468.00	2.26	2.29	2.35	225.55	228.28	234.67	509.13	521.92	551.00
26.80	120.00	480.00	2.26	2.28	2.34	226.52	227.29	234.25	512.26	517.27	549.01
27.47	123.00	492.00	2.27	2.27	2.34	227.50	226.32	233.77	517.02	512.89	546.83
28.14	126.00	504.00	2.27	2.26	2.33	226.56	225.20	233.08	514.33	507.95	543.79
28.81	129.00	516.00	2.24	2.24	2.33	222.98	224.20	232.30	499.49	503.28	540.17
29.48	132.00	528.00	2.23	2.24	2.32	222.64	223.62	231.75	495.43	500.41	537.44
30.15	135.00	540.00	2.24	2.23	2.31	224.64	223.30	231.29	503.08	498.80	535.28
30.82	138.00	552.00	2.26	2.23	2.31	226.77	223.04	230.80	512.93	497.64	533.06
31.49	141.00	564.00	2.27	2.23	2.30	226.89	222.66	230.14	515.15	496.06	530.13
32.16	144.00	576.00	2.25	2.22	2.30	224.06	222.15	229.43	503.88	493.80	526.85
32.83	147.00	588.00	2.24	2.22	2.29	224.07	222.05	228.97	501.66	493.07	524.55

33.50	150.00	600.00	2.25	2.22	2.29	226.14	222.20	228.62	509.85	493.59	522.92
34.17	153.00	612.00	2.28	2.22	2.28	228.09	222.43	228.27	519.06	494.58	521.33
34.84	156.00	624.00	2.28	2.23	2.28	227.77	222.54	227.77	519.48	495.20	519.15
35.51	159.00	636.00	2.25	2.22	2.27	224.43	222.41	227.20	505.87	494.73	516.55
36.18	162.00	648.00	2.24	2.22	2.27	224.15	222.56	226.88	502.21	495.20	514.94
36.85	165.00	660.00	2.25	2.23	2.27	225.93	222.95	226.70	509.07	496.78	514.03
37.52	168.00	672.00	2.27	2.23	2.27	227.63	223.39	226.52	517.15	498.74	513.25
38.19	171.00	684.00	2.27	2.24	2.26	227.12	223.69	226.21	516.66	500.22	511.95
38.86	174.00	696.00	2.25	2.24	2.26	223.76	223.70	225.78	502.80	500.42	510.05
39.53	177.00	708.00	2.24	2.24	2.26	223.75	223.91	225.61	500.21	501.18	509.09
40.20	180.00	720.00	2.25	2.24	2.26	225.77	224.32	225.58	508.18	502.91	508.86

F. Simulasi Torsi *Cogging* Generator Sinkron Magnet Permanen Jenis Ndfeb 48/11

t (ms)	Mekanikal (deg)	Electrical (deg)	Torsi *Cogging* (Nm)
0	0	0	-0.0000921
0.11	0.5	2	0.0586523
0.22	1	4	0.1109405
0.33	1.5	6	0.1470630
0.44	2	8	0.1631343
0.55	2.5	10	0.1575826
0.66	3	12	0.1323193
0.77	3.5	14	0.0925629
0.88	4	16	0.0446716
0.99	4.5	18	-0.0032705
1.1	5	20	-0.0437657
1.21	5.5	22	-0.0702269
1.32	6	24	-0.0787193
1.43	6.5	26	-0.0685200
1.54	7	28	-0.0423531
1.65	7.5	30	-0.0065138
1.76	8	32	0.0307772
1.87	8.5	34	0.0606896
1.98	9	36	0.0763442
2.09	9.5	38	0.0736410
2.2	10	40	0.0524399
2.31	10.5	42	0.0157025
2.42	11	44	-0.0307284
2.53	11.5	46	-0.0794954
2.64	12	48	-0.1225385
2.75	12.5	50	-0.1530875
2.86	13	52	-0.1652626
2.97	13.5	54	-0.1560436
3.08	14	56	-0.1258127
3.19	14.5	58	-0.0781614
3.3	15	60	-0.0194295

LAMPIRAN III

Data Hasil Simulasi Tanpa Beban, Simulasi Berbeban, Dan Simulasi *Cogging* Generator Sinkron Magnet Permanen Jenis Ceramic 11

A. Tabel Hasil Simulasi Tanpa Beban Generator Sinkron Magnet Permanen Jenis Ceramic 11

1. Tegangan Fasa Generator Sinkron Magnet Permanen

t (ms)	Mekanikal (deg)	Elektrikal (deg)	Tegangan fasa (Volt AC)			Vpeak (Volt AC)
			U	V	W	
0	0	0	0.00	0.00	0.00	0.00
0.67	3	12	30.35	20.58	-41.99	41.99
1.34	6	24	36.81	9.93	-41.52	41.52
2.01	9	36	40.44	-0.11	-40.39	40.44
2.68	12	48	41.54	-10.15	-36.71	41.54
3.35	15	60	41.99	-20.82	-30.17	41.99
4.02	18	72	41.97	-30.55	-20.32	41.97
4.69	21	84	41.51	-36.94	-9.67	41.51
5.36	24	96	40.33	-40.49	0.36	40.49
6.03	27	108	36.58	-41.55	10.41	41.55
6.7	30	120	29.96	-42.00	21.09	42.00
7.37	33	132	20.05	-41.96	30.75	41.96
8.04	36	144	9.42	-41.50	37.06	41.50
8.71	39	156	-0.61	-40.28	40.55	40.55
9.38	42	168	-10.66	-36.45	41.56	41.56
10.05	45	180	-21.36	-29.75	42.02	42.02
10.72	48	192	-30.95	-19.78	41.95	41.95
11.39	51	204	-37.18	-9.16	41.48	41.48
12.06	54	216	-40.60	0.86	40.22	40.60
12.73	57	228	-41.57	10.92	36.32	41.57
13.4	60	240	-42.02	21.62	29.54	42.02
14.07	63	252	-41.94	31.14	19.51	41.94
14.74	66	264	-41.47	37.30	8.91	41.47
15.41	69	276	-40.15	40.64	-1.10	40.64
16.08	72	288	-36.19	41.58	-11.18	41.58
16.75	75	300	-29.33	42.03	-21.89	42.03
17.42	78	312	-19.23	41.93	-31.34	41.93
18.09	81	324	-8.66	41.46	-37.42	41.46
18.76	84	336	1.35	40.09	-40.69	40.69
19.43	87	348	11.44	36.06	-41.60	41.60
20.1	90	360	22.16	29.11	-42.04	42.04
20.77	93	372	31.53	18.96	-41.92	41.92
21.44	96	384	37.53	8.41	-41.44	41.44
22.11	99	396	40.73	-1.60	-40.02	40.73
22.78	102	408	41.61	-11.69	-35.93	41.61
23.45	105	420	42.04	-22.42	-28.89	42.04
24.12	108	432	41.91	-31.71	-18.69	41.91
24.79	111	444	41.43	-37.64	-8.15	41.43

25.46	114	456	39.95	-40.77	1.85	40.77
26.13	117	468	35.79	-41.62	11.95	41.62
26.8	120	480	28.67	-42.05	22.69	42.05
27.47	123	492	18.42	-41.90	31.90	41.90
28.14	126	504	7.90	-41.41	37.76	41.41
28.81	129	516	-2.10	-39.89	40.82	40.82
29.48	132	528	-12.21	-35.65	41.63	41.63
30.15	135	540	-22.95	-28.45	42.06	42.06
30.82	138	552	-32.09	-18.15	41.89	41.89
31.49	141	564	-37.87	-7.65	41.40	41.40
32.16	144	576	-40.86	2.34	39.82	40.86
32.83	147	588	-41.64	12.47	35.51	41.64
33.5	150	600	-42.06	23.21	28.22	42.06
34.17	153	612	-41.87	32.26	17.88	41.87
34.84	156	624	-41.38	37.98	7.40	41.38
35.51	159	636	-39.74	40.89	-2.59	40.89
36.18	162	648	-35.37	41.65	-12.73	41.65
36.85	165	660	-27.99	42.07	-23.47	42.07
37.52	168	672	-17.61	41.86	-32.45	41.86
38.19	171	684	-7.15	41.37	-38.09	41.37
38.86	174	696	2.84	39.67	-40.93	40.93
39.53	177	708	13.00	35.23	-41.66	41.66
40.2	180	720	23.73	27.76	-42.08	42.08

2. Tegangan *Line* Generator Sinkron Magnet Permanen

t (ms)	Mekanikal (deg)	Elektrikal (deg)	Tegangan Line (Volt AC)			Vpeak (Volt AC)
			UV	VW	UW	
0	0	0	0.00	0.00	0.00	0.00
0.67	3	12	-9.76	-62.57	72.33	72.33
1.34	6	24	-26.89	-51.45	78.34	78.34
2.01	9	36	-40.55	-40.28	80.83	80.83
2.68	12	48	-51.69	-26.55	78.24	78.24
3.35	15	60	-62.81	-9.35	72.17	72.17
4.02	18	72	-72.52	10.23	62.29	72.52
4.69	21	84	-78.44	27.26	51.18	78.44
5.36	24	96	-80.82	40.85	39.97	80.82
6.03	27	108	-78.12	51.95	26.17	78.12
6.7	30	120	-71.96	63.09	8.87	71.96
7.37	33	132	-62.01	72.71	-10.70	72.71
8.04	36	144	-50.91	78.56	-27.65	78.56
8.71	39	156	-39.67	80.82	-41.15	80.82
9.38	42	168	-25.79	78.01	-52.23	78.01
10.05	45	180	-8.40	71.77	-63.37	71.77
10.72	48	192	11.17	61.73	-72.90	72.90
11.39	51	204	28.02	50.65	-78.66	78.66
12.06	54	216	41.45	39.36	-80.82	80.82
12.73	57	228	52.49	25.40	-77.89	77.89
13.4	60	240	63.64	7.92	-71.56	71.56
14.07	63	252	73.08	-11.63	-61.45	73.08
14.74	66	264	78.76	-28.39	-50.38	78.76
15.41	69	276	80.80	-41.75	-39.05	80.80
16.08	72	288	77.77	-52.76	-25.01	77.77
16.75	75	300	71.35	-63.92	-7.43	71.35
17.42	78	312	61.16	-73.27	12.10	73.27
18.09	81	324	50.11	-78.87	28.76	78.87
18.76	84	336	38.74	-80.78	42.04	80.78
19.43	87	348	24.62	-77.66	53.03	77.66
20.1	90	360	6.95	-71.15	64.20	71.15
20.77	93	372	-12.56	-60.89	73.45	73.45
21.44	96	384	-29.12	-49.85	78.97	78.97
22.11	99	396	-42.33	-38.43	80.76	80.76
22.78	102	408	-53.30	-24.23	77.53	77.53
23.45	105	420	-64.46	-6.47	70.94	70.94
24.12	108	432	-73.62	13.02	60.60	73.62
24.79	111	444	-79.07	29.49	49.58	79.07
25.46	114	456	-80.73	42.62	38.11	80.73
26.13	117	468	-77.40	53.57	23.83	77.40

26.8	120	480	-70.72	64.74	5.98	70.72
27.47	123	492	-60.32	73.80	-13.48	73.80
28.14	126	504	-49.31	79.17	-29.86	79.17
28.81	129	516	-37.79	80.71	-42.92	80.71
29.48	132	528	-23.44	77.28	-53.84	77.28
30.15	135	540	-5.50	70.51	-65.01	70.51
30.82	138	552	13.93	60.04	-73.97	73.97
31.49	141	564	30.22	49.05	-79.27	79.27
32.16	144	576	43.20	37.47	-80.67	80.67
32.83	147	588	54.11	23.04	-77.15	77.15
33.5	150	600	65.27	5.01	-70.29	70.29
34.17	153	612	74.13	-14.38	-59.75	74.13
34.84	156	624	79.36	-30.58	-48.78	79.36
35.51	159	636	80.63	-43.48	-37.15	80.63
36.18	162	648	77.02	-54.38	-22.63	77.02
36.85	165	660	70.06	-65.54	-4.52	70.06
37.52	168	672	59.47	-74.31	14.84	74.31
38.19	171	684	48.51	-79.45	30.94	79.45
38.86	174	696	36.83	-80.60	43.77	80.60
39.53	177	708	22.23	-76.89	54.66	76.89
40.2	180	720	4.03	-69.84	65.81	69.84

B. Tabel Hasil Simulasi *Oprn Circuit* Generator Sinkron Magnet Permanen Jenis Ceramic 11

t (ms)	Mekanikal (deg)	Elektrikal (deg)	Voc (Volt)
0	0	0	0
0.67	3	12	41.64136
1.34	6	24	62.51303
2.01	9	36	71.29393
2.68	12	48	72.33066
3.35	15	60	69.29262
4.02	18	72	65.70133
4.69	21	84	66.63714
5.36	24	96	72.9365
6.03	27	108	72.85677
6.7	30	120	69.3836
7.37	33	132	65.73601
8.04	36	144	66.87447
8.71	39	156	72.99081
9.38	42	168	72.80463
10.05	45	180	69.26238
10.72	48	192	65.7025
11.39	51	204	67.09473
12.06	54	216	73.03636
12.73	57	228	72.74576
13.4	60	240	69.13369
14.07	63	252	65.6601
14.74	66	264	67.30907
15.41	69	276	73.07199
16.08	72	288	72.67994
16.75	75	300	69.00024
17.42	78	312	65.6181
18.09	81	324	67.52908
18.76	84	336	73.1116
19.43	87	348	72.62261
20.1	90	360	68.87324
20.77	93	372	65.57819
21.44	96	384	67.74262
22.11	99	396	73.14721
22.78	102	408	72.5592
23.45	105	420	68.73876
24.12	108	432	65.52958
24.79	111	444	67.94663
25.46	114	456	73.17382

26.13	117	468	72.48887
26.8	120	480	68.59978
27.47	123	492	65.48133
28.14	126	504	68.15469
28.81	129	516	73.2091
29.48	132	528	72.42739
30.15	135	540	68.4678
30.82	138	552	65.43551
31.49	141	564	68.35717
32.16	144	576	73.23635
32.83	147	588	72.35932
33.5	150	600	68.32732
34.17	153	612	65.38028
34.84	156	624	68.54952
35.51	159	636	73.25454
36.18	162	648	72.28564
36.85	165	660	68.18269
37.52	168	672	65.32682
38.19	171	684	68.74655
38.86	174	696	73.27947
39.53	177	708	72.21952
40.2	180	720	68.04393

C. Tabel Hasil Simulasi Berbeban Generator Sinkron Magnet Permanen Jenis Ceramic 11 pada Beban R (100 Ω)

t (ms)	Mekanikal (deg)	Elektrikal (deg)	Torsi (Nm)	Arus (Amp AC)			Tegangan *Line* (Volt AC)			Ipeak (Amp AC)	Vpeak (Volt AC)	Daya (Watt AC)		IDC (Amp DC)	VDC (Volt DC)	Daya (Watt DC)	
				U	V	W	UV	VW	UW			In	Out			In	Out
0.00	0.00	0.00	0.00	0.00	0.00	0.00	0.00	0.00	0.00	0.00	0.00	0.05	0.00	0.00	0.00	0.05	0.00
0.67	3.00	12.00	0.58	-0.42	-0.25	0.67	0.00	-15.81	15.81	0.67	15.81	45.83	10.66	0.66	14.41	45.83	9.44
1.34	6.00	24.00	1.11	-0.90	-0.28	1.18	0.00	-26.71	26.72	1.18	26.72	87.40	31.63	1.15	25.31	87.40	29.12
2.01	9.00	36.00	1.48	-1.39	-0.14	1.53	0.00	-34.08	34.09	1.53	34.09	116.43	52.09	1.49	32.68	116.43	48.55
2.68	12.00	48.00	1.73	-1.78	0.02	1.76	-39.47	0.00	39.47	1.78	39.47	135.91	70.25	1.73	38.06	135.91	65.86
3.35	15.00	60.00	1.82	-2.03	0.06	1.97	-44.72	0.00	44.72	2.03	44.72	143.06	90.56	1.97	43.31	143.06	85.27
4.02	18.00	72.00	1.83	-2.25	0.26	1.99	-49.63	0.00	49.63	2.25	49.63	143.66	111.90	2.19	48.22	143.66	105.71
4.69	21.00	84.00	1.89	-2.44	0.62	1.81	-53.53	0.00	53.53	2.44	53.53	148.17	130.45	2.37	52.12	148.17	123.49
5.36	24.00	96.00	1.83	-2.51	1.05	1.46	-55.05	0.00	55.05	2.51	55.05	143.52	138.04	2.44	53.64	143.52	130.78
6.03	27.00	108.00	1.73	-2.41	1.48	0.94	-53.07	0.00	53.06	2.41	53.07	136.05	128.15	2.35	51.66	136.05	121.29
6.70	30.00	120.00	1.75	-2.18	1.93	0.25	-48.11	0.00	48.10	2.18	48.11	137.41	105.02	2.12	46.70	137.41	99.11
7.37	33.00	132.00	1.93	-1.94	2.34	-0.41	-51.53	51.53	0.00	2.34	51.53	151.56	120.76	2.28	50.12	151.56	114.20
8.04	36.00	144.00	1.98	-1.75	2.50	-0.75	-54.95	54.94	0.00	2.50	54.95	155.61	137.53	2.43	53.54	155.61	130.28
8.71	39.00	156.00	1.91	-1.39	2.55	-1.16	-56.04	56.04	0.00	2.55	56.04	149.81	143.12	2.48	54.63	149.81	135.65
9.38	42.00	168.00	1.81	-0.87	2.45	-1.58	-53.71	53.71	0.00	2.45	53.71	141.85	131.34	2.38	52.30	141.85	124.34
10.05	45.00	180.00	1.83	-0.17	2.20	-2.03	-48.51	48.52	0.00	2.20	48.52	143.64	106.86	2.14	47.11	143.64	100.87
10.72	48.00	192.00	1.93	0.34	2.03	-2.37	0.00	52.04	-52.04	2.37	52.04	151.74	123.20	2.30	50.63	151.74	116.54
11.39	51.00	204.00	1.97	0.69	1.83	-2.52	0.00	55.37	-55.37	2.52	55.37	154.46	139.70	2.45	53.96	154.46	132.36
12.06	54.00	216.00	1.88	1.11	1.46	-2.57	0.00	56.34	-56.34	2.57	56.34	147.31	144.66	2.50	54.93	147.31	137.13
12.73	57.00	228.00	1.76	1.53	0.92	-2.45	0.00	53.86	-53.86	2.45	53.86	138.61	132.06	2.38	52.45	138.61	125.04
13.40	60.00	240.00	1.78	1.98	0.22	-2.20	0.00	48.52	-48.52	2.20	48.52	139.79	106.87	2.14	47.11	139.79	100.88
14.07	63.00	252.00	1.93	2.36	-0.38	-1.98	51.92	0.00	-51.92	2.36	51.92	151.70	122.61	2.30	50.51	151.70	115.97
14.74	66.00	264.00	1.97	2.52	-0.74	-1.78	55.23	0.00	-55.24	2.52	55.24	155.06	139.00	2.45	53.83	155.06	131.70

15.41	69.00	276.00	1.89	2.56	-1.15	-1.41	56.15	0.00	-56.15	2.56	56.15	148.17	143.69	2.49	54.74	148.17	136.20
16.08	72.00	288.00	1.78	2.44	-1.57	-0.87	53.63	0.00	-53.62	2.44	53.63	140.10	130.91	2.37	52.22	140.10	123.93
16.75	75.00	300.00	1.81	2.19	-2.03	-0.17	48.27	0.00	-48.27	2.19	48.27	142.18	105.77	2.13	46.86	142.18	99.83
17.42	78.00	312.00	1.91	2.02	-2.36	0.34	51.84	-51.83	0.00	2.36	51.84	150.29	122.21	2.29	50.43	150.29	115.58
18.09	81.00	324.00	1.95	1.82	-2.51	0.70	55.18	-55.18	0.00	2.51	55.18	153.14	138.71	2.44	53.77	153.14	131.41
18.76	84.00	336.00	1.86	1.44	-2.55	1.12	56.05	-56.05	0.00	2.55	56.05	145.81	143.20	2.48	54.65	145.81	135.73
19.43	87.00	348.00	1.75	0.89	-2.43	1.54	53.47	-53.47	0.00	2.43	53.47	137.67	130.16	2.37	52.06	137.67	123.21
20.10	90.00	360.00	1.78	0.18	-2.18	2.00	48.06	-48.06	0.00	2.18	48.06	139.76	104.83	2.12	46.65	139.76	98.93
20.77	93.00	372.00	1.90	-0.35	-1.99	2.35	0.00	-51.61	51.61	2.35	51.61	149.49	121.14	2.28	50.20	149.49	114.56
21.44	96.00	384.00	1.94	-0.72	-1.79	2.50	0.00	-54.98	54.98	2.50	54.98	152.73	137.68	2.43	53.57	152.73	130.43
22.11	99.00	396.00	1.85	-1.14	-1.41	2.54	0.00	-55.83	55.83	2.54	55.83	145.59	142.03	2.47	54.42	145.59	134.60
22.78	102.00	408.00	1.76	-1.56	-0.86	2.42	0.00	-53.21	53.21	2.42	53.21	137.88	128.89	2.35	51.81	137.88	121.99
23.45	105.00	420.00	1.79	-2.02	-0.15	2.17	0.00	-47.79	47.79	2.17	47.79	140.76	103.63	2.11	46.38	140.76	97.78
24.12	108.00	432.00	1.89	-2.34	0.32	2.02	-51.46	0.00	51.46	2.34	51.46	148.10	120.42	2.28	50.05	148.10	113.87
24.79	111.00	444.00	1.92	-2.50	0.69	1.81	-54.85	0.00	54.86	2.50	54.86	151.08	137.07	2.43	53.45	151.08	129.84
25.46	114.00	456.00	1.83	-2.54	1.12	1.42	-55.67	0.00	55.68	2.54	55.68	143.75	141.24	2.47	54.27	143.75	133.85
26.13	117.00	468.00	1.73	-2.41	1.54	0.87	-53.02	0.00	53.01	2.41	53.02	136.16	127.91	2.35	51.61	136.16	121.05
26.80	120.00	480.00	1.77	-2.16	2.01	0.15	-47.55	0.00	47.54	2.16	47.55	139.27	102.57	2.10	46.14	139.27	96.76
27.47	123.00	492.00	1.87	-2.00	2.33	-0.33	-51.25	51.24	0.00	2.33	51.25	147.13	119.40	2.27	49.84	147.13	112.89
28.14	126.00	504.00	1.91	-1.79	2.49	-0.70	-54.66	54.66	0.00	2.49	54.66	150.30	136.10	2.42	53.25	150.30	128.91
28.81	129.00	516.00	1.82	-1.40	2.53	-1.13	-55.46	55.46	0.00	2.53	55.46	143.09	140.13	2.46	54.05	143.09	132.78
29.48	132.00	528.00	1.73	-0.85	2.40	-1.56	-52.76	52.77	0.00	2.40	52.77	135.92	126.69	2.33	51.36	135.92	119.88
30.15	135.00	540.00	1.78	-0.12	2.14	-2.02	-47.28	47.28	0.00	2.14	47.28	139.53	101.40	2.09	45.87	139.53	95.64
30.82	138.00	552.00	1.86	0.31	2.02	-2.32	0.00	51.07	-51.07	2.32	51.07	145.81	118.58	2.26	49.66	145.81	112.11
31.49	141.00	564.00	1.90	0.69	1.80	-2.48	0.00	54.52	-54.52	2.48	54.52	148.83	135.37	2.41	53.11	148.83	128.21
32.16	144.00	576.00	1.80	1.11	1.40	-2.52	0.00	55.28	-55.28	2.52	55.28	141.53	139.25	2.45	53.88	141.53	131.93
32.83	147.00	588.00	1.71	1.55	0.84	-2.39	0.00	52.55	-52.55	2.39	52.55	134.57	125.64	2.32	51.14	134.57	118.88

33.50	150.00	600.00	1.76	2.01	0.12	-2.13	0.00	47.03	-47.03	2.13	47.03	138.52	100.31	2.07	45.62	138.52	94.60
34.17	153.00	612.00	1.84	2.31	-0.30	-2.01	50.86	0.00	-50.87	2.31	50.87	144.81	117.61	2.25	49.46	144.81	111.18
34.84	156.00	624.00	1.88	2.47	-0.69	-1.79	54.33	0.00	-54.34	2.47	54.34	147.83	134.45	2.41	52.93	147.83	127.33
35.51	159.00	636.00	1.79	2.51	-1.12	-1.39	55.07	0.00	-55.07	2.51	55.07	140.61	138.17	2.44	53.66	140.61	130.90
36.18	162.00	648.00	1.71	2.38	-1.55	-0.83	52.30	0.00	-52.30	2.38	52.30	134.02	124.45	2.31	50.89	134.02	117.74
36.85	165.00	660.00	1.76	2.12	-2.02	-0.10	46.76	0.00	-46.76	2.12	46.76	138.52	99.15	2.06	45.35	138.52	93.49
37.52	168.00	672.00	1.83	2.02	-2.30	0.29	50.68	-50.67	0.00	2.30	50.68	143.54	116.74	2.24	49.27	143.54	110.34
38.19	171.00	684.00	1.87	1.79	-2.47	0.68	54.18	-54.17	0.00	2.47	54.18	146.48	133.65	2.40	52.77	146.48	126.56
38.86	174.00	696.00	1.77	1.39	-2.50	1.11	54.88	-54.88	0.00	2.50	54.88	139.24	137.21	2.43	53.47	139.24	129.98
39.53	177.00	708.00	1.69	0.82	-2.37	1.55	52.07	-52.08	0.00	2.37	52.08	132.90	123.35	2.30	50.67	132.90	116.69
40.20	180.00	720.00	1.75	0.09	-2.11	2.02	46.50	-46.50	0.00	2.11	46.50	137.80	98.04	2.05	45.09	137.80	92.42

D. Tabel Perbandingan Arus DC, Tegangan DC, dan Daya Pada Simulasi Berbeban Generator Sinkron Magnet Permanen Jenis Ceramic 11 dengan Beban R (100Ω) dan Beban L (0,4 mH, 1 mH, 20 mH)

t (ms)	Mekanikal (deg)	Elektrikal (deg)	IDC (Ampere)			VDC (Volt)			Daya Outptut (Watt)		
			0,4 mH	1 mH	20 mH	0,4 mH	1 mH	20 mH	0,4 mH	1 mH	20 mH
0.00	0.00	0.00	0.00	0.00	0.00	0.00	0.00	0.00	0.00	0.00	0.00
0.67	3.00	12.00	0.65	0.64	0.49	14.66	15.04	26.32	9.54	9.69	12.97
1.34	6.00	24.00	1.14	1.14	0.90	25.43	25.60	30.36	29.10	29.06	27.41
2.01	9.00	36.00	1.48	1.47	1.22	32.67	32.65	34.80	48.30	47.94	42.30
2.68	12.00	48.00	1.73	1.72	1.50	38.20	38.43	40.39	65.97	66.17	60.67
3.35	15.00	60.00	1.96	1.95	1.73	43.32	43.33	44.91	85.00	84.62	77.87
4.02	18.00	72.00	2.19	2.18	1.95	48.23	48.23	49.16	105.41	104.98	95.66
4.69	21.00	84.00	2.36	2.35	2.12	52.08	52.01	51.03	123.08	122.47	108.31
5.36	24.00	96.00	2.43	2.43	2.22	53.51	53.32	49.47	130.21	129.37	109.79
6.03	27.00	108.00	2.35	2.34	2.20	51.46	51.17	44.76	120.68	119.77	98.31
6.70	30.00	120.00	2.12	2.12	2.06	46.48	46.16	38.88	98.63	97.92	80.18
7.37	33.00	132.00	2.28	2.27	2.18	50.77	51.71	63.64	115.52	117.45	138.61
8.04	36.00	144.00	2.43	2.43	2.33	53.55	53.56	53.30	130.18	130.00	123.99
8.71	39.00	156.00	2.48	2.48	2.39	54.55	54.43	52.16	135.33	134.87	124.47
9.38	42.00	168.00	2.38	2.38	2.33	52.14	51.91	46.69	123.92	123.30	108.78
10.05	45.00	180.00	2.14	2.14	2.17	46.92	46.65	40.30	100.53	100.03	87.26
10.72	48.00	192.00	2.30	2.30	2.23	51.14	51.90	71.47	117.65	119.29	159.49
11.39	51.00	204.00	2.45	2.45	2.38	54.00	54.04	53.31	132.37	132.37	126.63
12.06	54.00	216.00	2.50	2.49	2.42	54.86	54.76	52.70	136.90	136.55	127.72
12.73	57.00	228.00	2.38	2.38	2.36	52.30	52.08	47.01	124.68	124.16	110.81
13.40	60.00	240.00	2.14	2.15	2.18	46.93	46.68	40.52	100.59	100.15	88.53
14.07	63.00	252.00	2.30	2.29	2.26	51.14	52.06	71.91	117.37	119.42	162.64
14.74	66.00	264.00	2.45	2.44	2.40	53.87	53.92	53.69	131.75	131.80	128.85
15.41	69.00	276.00	2.49	2.49	2.44	54.68	54.59	52.88	136.00	135.70	129.14
16.08	72.00	288.00	2.37	2.37	2.37	52.07	51.86	47.10	123.60	123.12	111.58
16.75	75.00	300.00	2.13	2.13	2.19	46.69	46.44	40.51	99.55	99.14	88.79
17.42	78.00	312.00	2.29	2.29	2.27	50.94	51.70	72.09	116.72	118.42	163.42
18.09	81.00	324.00	2.44	2.44	2.40	53.81	53.87	53.68	131.47	131.54	129.04
18.76	84.00	336.00	2.48	2.48	2.44	54.58	54.49	52.78	135.53	135.24	128.93
19.43	87.00	348.00	2.37	2.37	2.37	51.92	51.71	46.96	122.89	122.41	111.15
20.10	90.00	360.00	2.12	2.13	2.19	46.48	46.23	40.34	98.66	98.26	88.22
20.77	93.00	372.00	2.28	2.28	2.27	50.75	51.57	71.00	115.79	117.61	160.82
21.44	96.00	384.00	2.43	2.43	2.40	53.61	53.67	53.71	130.50	130.58	128.96
22.11	99.00	396.00	2.47	2.47	2.44	54.36	54.26	52.59	134.41	134.12	128.24
22.78	102.00	408.00	2.36	2.36	2.36	51.66	51.45	46.76	121.67	121.20	110.39
23.45	105.00	420.00	2.11	2.11	2.18	46.21	45.96	40.12	97.52	97.13	87.41
24.12	108.00	432.00	2.27	2.27	2.26	50.53	51.23	70.21	114.93	116.51	158.65

24.79	111.00	444.00	2.43	2.43	2.40	53.49	53.55	53.64	129.90	129.98	128.49
25.46	114.00	456.00	2.47	2.46	2.43	54.20	54.11	52.35	133.65	133.36	127.32
26.13	117.00	468.00	2.35	2.35	2.35	51.46	51.25	46.53	120.74	120.27	109.44
26.80	120.00	480.00	2.10	2.10	2.17	45.97	45.72	39.87	96.50	96.11	86.47
27.47	123.00	492.00	2.26	2.26	2.25	50.32	51.03	69.03	113.96	115.55	155.58
28.14	126.00	504.00	2.42	2.42	2.39	53.30	53.36	53.60	128.98	129.07	128.04
28.81	129.00	516.00	2.46	2.45	2.42	53.98	53.89	52.13	132.59	132.30	126.38
29.48	132.00	528.00	2.33	2.34	2.34	51.21	51.00	46.29	119.57	119.11	108.47
30.15	135.00	540.00	2.09	2.09	2.16	45.70	45.45	39.61	95.38	95.00	85.51
30.82	138.00	552.00	2.26	2.26	2.25	50.09	50.73	68.02	113.06	114.48	152.85
31.49	141.00	564.00	2.41	2.41	2.38	53.16	53.22	53.52	128.28	128.37	127.50
32.16	144.00	576.00	2.45	2.45	2.42	53.81	53.71	51.88	131.73	131.44	125.37
32.83	147.00	588.00	2.33	2.33	2.33	51.00	50.78	46.05	118.57	118.10	107.47
33.50	150.00	600.00	2.08	2.08	2.15	45.45	45.20	39.35	94.34	93.96	84.54
34.17	153.00	612.00	2.25	2.25	2.24	49.87	50.50	66.89	112.10	113.49	149.86
34.84	156.00	624.00	2.41	2.40	2.38	52.97	53.04	53.45	127.40	127.49	126.96
35.51	159.00	636.00	2.44	2.44	2.41	53.60	53.50	51.63	130.70	130.41	124.35
36.18	162.00	648.00	2.31	2.31	2.32	50.75	50.54	45.81	117.43	116.97	106.48
36.85	165.00	660.00	2.06	2.07	2.14	45.18	44.93	39.09	93.24	92.86	83.55
37.52	168.00	672.00	2.24	2.24	2.23	49.65	50.21	65.82	111.17	112.42	147.01
38.19	171.00	684.00	2.40	2.40	2.37	52.81	52.88	53.38	126.63	126.72	126.39
38.86	174.00	696.00	2.43	2.43	2.40	53.41	53.30	51.37	129.77	129.48	123.31
39.53	177.00	708.00	2.30	2.30	2.31	50.52	50.31	45.56	116.38	115.92	105.47
40.20	180.00	720.00	2.05	2.06	2.13	44.92	44.67	38.82	92.17	91.80	82.57

E. Tabel Perbandingan Hasil Simulasi Berbeban Generator Sinkron Magnet Permanen Jenis Ceramic 11 pada Beban R dan L dengan Penambahan Filter C

1. Pada Beban R = 100 Ω

t (ms)	Mekanikal (deg)	Elektrikal (deg)	IDC (Amp DC)			VDC (Volt DC)			Daya Output (Watt)		
			47 µF	470 µF	680 µF	47 µF	470 µF	680 µF	47 µF	470 µF	680 µF
0	0	0	0.00	0.00	0.00	0.00	0.00	0.00	0.00	0.00	0.00
0.67	3	12	0.19	0.02	0.02	4.13	0.52	0.37	0.78	0.01	0.01
1.34	6	24	0.61	0.09	0.07	13.53	2.05	1.44	8.32	0.19	0.09
2.01	9	36	1.10	0.20	0.14	24.23	4.45	3.15	26.68	0.90	0.45
2.68	12	48	1.51	0.34	0.25	33.32	7.54	5.39	50.45	2.58	1.32
3.35	15	60	1.83	0.50	0.36	40.26	11.01	7.97	73.68	5.51	2.89
4.02	18	72	2.13	0.67	0.49	46.78	14.75	10.79	99.47	9.89	5.29
4.69	21	84	2.39	0.87	0.64	52.48	19.11	14.13	125.18	16.61	9.08
5.36	24	96	2.58	1.09	0.82	56.73	23.98	17.93	146.26	26.13	14.62
6.03	27	108	2.65	1.32	1.00	58.33	29.05	22.01	154.66	38.37	22.02
6.7	30	120	2.56	1.54	1.19	56.42	33.96	26.10	144.69	52.43	30.97
7.37	33	132	2.39	1.74	1.36	52.52	38.33	29.95	125.36	66.80	40.78
8.04	36	144	2.36	1.90	1.52	51.95	41.87	33.35	122.66	79.68	50.54
8.71	39	156	2.41	2.03	1.65	52.96	44.76	36.28	127.48	91.08	59.82
9.38	42	168	2.42	2.17	1.78	53.33	47.66	39.24	129.26	103.24	69.98
10.05	45	180	2.34	2.28	1.91	51.44	50.18	42.03	120.29	114.44	80.31
10.72	48	192	2.22	2.36	2.02	48.87	51.99	44.42	108.54	122.85	89.68
11.39	51	204	2.28	2.40	2.10	50.15	52.85	46.19	114.32	126.97	96.96
12.06	54	216	2.38	2.41	2.15	52.30	53.11	47.32	124.34	128.20	101.80
12.73	57	228	2.42	2.42	2.20	53.29	53.34	48.30	129.10	129.33	106.04

13.4	60	240	2.35	2.42	2.23	51.69	53.28	49.10	121.44	129.02	109.56
14.07	63	252	2.25	2.39	2.25	49.48	52.68	49.50	111.30	126.14	111.39
14.74	66	264	2.31	2.36	2.25	50.74	51.90	49.49	117.01	122.43	111.31
15.41	69	276	2.40	2.33	2.25	52.80	51.33	49.51	126.70	119.78	111.40
16.08	72	288	2.44	2.31	2.25	53.64	50.81	49.55	130.79	117.34	111.62
16.75	75	300	2.36	2.28	2.25	51.86	50.09	49.45	122.25	114.05	111.15
17.42	78	312	2.24	2.24	2.23	49.34	49.34	49.16	110.67	110.68	109.84
18.09	81	324	2.30	2.22	2.23	50.53	48.91	49.07	116.08	108.74	109.45
18.76	84	336	2.39	2.21	2.23	52.56	48.72	49.14	125.55	107.88	109.74
19.43	87	348	2.43	2.21	2.24	53.36	48.58	49.22	129.44	107.26	110.12
20.1	90	360	2.34	2.19	2.23	51.56	48.26	49.15	120.82	105.86	109.82
20.77	93	372	2.24	2.18	2.23	49.27	47.93	49.02	110.35	104.42	109.25
21.44	96	384	2.29	2.18	2.23	50.46	47.91	49.10	115.73	104.36	109.58
22.11	99	396	2.39	2.19	2.24	52.48	48.13	49.32	125.17	105.31	110.58
22.78	102	408	2.42	2.20	2.25	53.25	48.39	49.56	128.91	106.41	111.64
23.45	105	420	2.34	2.20	2.26	51.40	48.42	49.62	120.08	106.55	111.93
24.12	108	432	2.23	2.19	2.25	49.01	48.28	49.51	109.19	105.96	111.43
24.79	111	444	2.28	2.20	2.26	50.20	48.49	49.65	114.56	106.89	112.07
25.46	114	456	2.37	2.22	2.27	52.22	48.91	49.93	123.97	108.75	113.32
26.13	117	468	2.41	2.24	2.28	52.99	49.33	50.20	127.65	110.63	114.55
26.8	120	480	2.32	2.25	2.29	51.12	49.50	50.29	118.79	111.37	114.94
27.47	123	492	2.22	2.25	2.28	48.89	49.45	50.23	108.64	111.13	114.70
28.14	126	504	2.28	2.26	2.29	50.08	49.73	50.40	114.01	112.41	115.45
28.81	129	516	2.37	2.28	2.30	52.10	50.19	50.69	123.40	114.52	116.78
29.48	132	528	2.40	2.30	2.32	52.85	50.63	50.96	126.95	116.52	118.03
30.15	135	540	2.32	2.31	2.32	50.93	50.78	51.03	117.92	117.19	118.36
30.82	138	552	2.21	2.30	2.31	48.66	50.67	50.91	107.65	116.68	117.83

31.49	141	564	2.27	2.31	2.32	49.86	50.89	51.03	113.00	117.70	118.37
32.16	144	576	2.36	2.33	2.33	51.88	51.27	51.26	122.36	119.47	119.44
32.83	147	588	2.39	2.35	2.34	52.61	51.60	51.47	125.83	121.02	120.39
33.5	150	600	2.30	2.35	2.34	50.68	51.63	51.46	116.74	121.14	120.38
34.17	153	612	2.21	2.34	2.33	48.52	51.42	51.32	107.00	120.17	119.70
34.84	156	624	2.26	2.34	2.34	49.71	51.51	51.37	112.34	120.62	119.96
35.51	159	636	2.35	2.35	2.34	51.74	51.77	51.54	121.67	121.80	120.74
36.18	162	648	2.38	2.36	2.35	52.44	51.96	51.68	125.01	122.73	121.39
36.85	165	660	2.29	2.36	2.35	50.47	51.85	51.60	115.78	122.20	121.04
37.52	168	672	2.20	2.34	2.34	48.31	51.53	51.38	106.07	120.70	119.99
38.19	171	684	2.25	2.34	2.33	49.50	51.50	51.36	111.39	120.58	119.91
38.86	174	696	2.34	2.35	2.34	51.53	51.64	51.46	120.69	121.20	120.35
39.53	177	708	2.37	2.35	2.34	52.22	51.72	51.52	123.94	121.59	120.64
40.2	180	720	2.28	2.34	2.34	50.22	51.50	51.37	114.64	120.54	119.96

2. Pada Beban R = 100 Ω, dan L = 0,4 mH

t (ms)	Mekanikal (deg)	Elektrikal (deg)	IDC (Amp DC)			VDC (Volt DC)			Daya Output (Watt)		
			47 µF	470 µF	680 µF	47 µF	470 µF	680 µF	47 µF	470 µF	680 µF
0	0	0	0.00	0.00	0.00	0.00	0.00	0.00	0.00	0.00	0.00
0.67	3	12	0.18	0.02	0.02	4.18	0.53	0.37	0.76	0.01	0.01
1.34	6	24	0.61	0.09	0.06	13.67	2.05	1.44	8.31	0.19	0.09
2.01	9	36	1.10	0.20	0.14	24.41	4.46	3.16	26.77	0.89	0.45
2.68	12	48	1.51	0.34	0.24	33.48	7.55	5.40	50.63	2.56	1.31
3.35	15	60	1.83	0.50	0.36	40.38	11.02	7.98	73.77	5.48	2.87
4.02	18	72	2.12	0.67	0.49	46.85	14.77	10.80	99.41	9.85	5.26
4.69	21	84	2.38	0.86	0.64	52.50	19.14	14.15	124.96	16.54	9.03
5.36	24	96	2.57	1.09	0.81	56.71	24.01	17.95	145.94	26.05	14.56
6.03	27	108	2.65	1.32	1.00	58.26	29.09	22.03	154.27	38.29	21.95
6.7	30	120	2.56	1.54	1.18	56.28	34.00	26.13	144.26	52.36	30.90
7.37	33	132	2.38	1.74	1.36	52.35	38.38	29.98	124.72	66.75	40.72
8.04	36	144	2.36	1.90	1.51	51.85	41.91	33.37	122.15	79.68	50.50
8.71	39	156	2.40	2.03	1.65	52.92	44.80	36.30	127.24	91.08	59.78
9.38	42	168	2.42	2.16	1.78	53.32	47.69	39.27	129.27	103.24	69.94
10.05	45	180	2.34	2.28	1.91	51.42	50.21	42.06	120.41	114.45	80.29
10.72	48	192	2.22	2.36	2.02	48.84	52.02	44.45	108.45	122.90	89.68
11.39	51	204	2.28	2.40	2.10	50.17	52.87	46.21	114.29	127.04	97.00
12.06	54	216	2.38	2.41	2.15	52.36	53.12	47.35	124.48	128.26	101.85
12.73	57	228	2.42	2.42	2.20	53.34	53.35	48.33	129.35	129.37	106.10
13.4	60	240	2.35	2.42	2.23	51.69	53.28	49.12	121.67	129.07	109.64
14.07	63	252	2.25	2.40	2.25	49.45	52.68	49.53	111.16	126.21	111.49
14.74	66	264	2.30	2.36	2.25	50.74	51.90	49.51	116.88	122.47	111.41

15.41	69	276	2.40	2.33	2.25	52.82	51.33	49.53	126.71	119.81	111.50
16.08	72	288	2.44	2.31	2.25	53.66	50.81	49.58	130.91	117.36	111.71
16.75	75	300	2.36	2.28	2.25	51.84	50.09	49.47	122.37	114.09	111.26
17.42	78	312	2.24	2.24	2.24	49.31	49.34	49.18	110.51	110.70	109.94
18.09	81	324	2.29	2.22	2.23	50.53	48.91	49.09	115.95	108.74	109.54
18.76	84	336	2.39	2.21	2.23	52.59	48.71	49.16	125.58	107.87	109.82
19.43	87	348	2.43	2.21	2.24	53.39	48.57	49.24	129.59	107.26	110.21
20.1	90	360	2.35	2.19	2.24	51.54	48.26	49.17	120.97	105.88	109.93
20.77	93	372	2.24	2.18	2.23	49.23	47.93	49.04	110.17	104.42	109.33
21.44	96	384	2.29	2.18	2.23	50.45	47.91	49.12	115.58	104.34	109.66
22.11	99	396	2.38	2.19	2.24	52.50	48.13	49.34	125.17	105.29	110.65
22.78	102	408	2.42	2.20	2.25	53.27	48.39	49.57	129.03	106.40	111.70
23.45	105	420	2.34	2.20	2.26	51.38	48.42	49.64	120.21	106.57	112.00
24.12	108	432	2.23	2.19	2.25	48.97	48.28	49.53	109.03	105.96	111.49
24.79	111	444	2.28	2.20	2.26	50.20	48.49	49.67	114.43	106.88	112.12
25.46	114	456	2.37	2.22	2.27	52.25	48.92	49.94	124.00	108.73	113.35
26.13	117	468	2.41	2.24	2.28	53.02	49.34	50.21	127.79	110.63	114.58
26.8	120	480	2.33	2.25	2.29	51.11	49.50	50.30	118.93	111.39	114.99
27.47	123	492	2.22	2.25	2.28	48.85	49.45	50.24	108.47	111.14	114.73
28.14	126	504	2.27	2.26	2.29	50.08	49.73	50.40	113.87	112.40	115.46
28.81	129	516	2.37	2.28	2.30	52.13	50.20	50.69	123.41	114.51	116.78
29.48	132	528	2.40	2.30	2.32	52.87	50.64	50.96	127.08	116.52	118.03
30.15	135	540	2.32	2.31	2.32	50.92	50.78	51.03	118.05	117.22	118.38
30.82	138	552	2.21	2.30	2.31	48.63	50.67	50.91	107.49	116.70	117.83
31.49	141	564	2.26	2.31	2.32	49.86	50.89	51.03	112.87	117.70	118.35
32.16	144	576	2.36	2.33	2.33	51.91	51.27	51.26	122.39	119.46	119.42
32.83	147	588	2.39	2.35	2.34	52.64	51.60	51.46	125.97	121.03	120.37

33.5	150	600	2.31	2.35	2.34	50.66	51.63	51.46	116.88	121.17	120.37
34.17	153	612	2.20	2.34	2.33	48.48	51.42	51.31	106.83	120.19	119.68
34.84	156	624	2.26	2.34	2.33	49.71	51.52	51.37	112.20	120.62	119.92
35.51	159	636	2.35	2.35	2.34	51.76	51.77	51.53	121.68	121.80	120.70
36.18	162	648	2.39	2.36	2.35	52.46	51.96	51.67	125.14	122.73	121.35
36.85	165	660	2.30	2.36	2.35	50.45	51.85	51.60	115.91	122.22	121.02
37.52	168	672	2.19	2.34	2.34	48.27	51.53	51.37	105.91	120.71	119.97
38.19	171	684	2.25	2.34	2.33	49.50	51.50	51.35	111.26	120.57	119.87
38.86	174	696	2.34	2.35	2.34	51.56	51.64	51.45	120.72	121.19	120.30
39.53	177	708	2.38	2.35	2.34	52.24	51.72	51.51	124.08	121.58	120.60
40.2	180	720	2.29	2.34	2.34	50.20	51.49	51.36	114.78	120.56	119.94

3. Pada Beban R = 100 Ω, dan L = 1 mH

t (ms)	Mekanikal (deg)	Elektrikal (deg)	IDC (Amp DC)			VDC (Volt DC)			Daya Output (Watt)		
			47 µF	470 µF	680 µF	47 µF	470 µF	680 µF	47 µF	470 µF	680 µF
0	0	0	0.00	0.00	0.00	0.00	0.00	0.00	0.00	0.00	0.00
0.67	3	12	0.17	0.02	0.01	4.26	0.53	0.37	0.72	0.01	0.01
1.34	6	24	0.60	0.09	0.06	13.88	2.05	1.44	8.29	0.18	0.09
2.01	9	36	1.09	0.19	0.14	24.69	4.47	3.16	26.91	0.87	0.44
2.68	12	48	1.51	0.33	0.24	33.72	7.56	5.41	50.90	2.52	1.29
3.35	15	60	1.82	0.49	0.35	40.56	11.05	7.99	73.93	5.43	2.84
4.02	18	72	2.12	0.66	0.48	46.95	14.81	10.82	99.32	9.78	5.22
4.69	21	84	2.37	0.86	0.63	52.54	19.18	14.17	124.64	16.45	8.97
5.36	24	96	2.57	1.08	0.80	56.68	24.05	17.98	145.45	25.93	14.47
6.03	27	108	2.64	1.31	0.99	58.15	29.14	22.06	153.69	38.15	21.85
6.7	30	120	2.56	1.53	1.18	56.08	34.06	26.16	143.60	52.24	30.79
7.37	33	132	2.38	1.73	1.35	52.10	38.44	30.02	123.82	66.67	40.62
8.04	36	144	2.35	1.90	1.51	51.70	41.97	33.42	121.35	79.67	50.43
8.71	39	156	2.40	2.03	1.64	52.88	44.86	36.35	126.88	91.08	59.73
9.38	42	168	2.42	2.16	1.78	53.32	47.75	39.31	129.29	103.23	69.88
10.05	45	180	2.35	2.28	1.91	51.40	50.26	42.11	120.61	114.47	80.25
10.72	48	192	2.22	2.36	2.02	48.81	52.06	44.49	108.37	122.96	89.68
11.39	51	204	2.27	2.40	2.10	50.20	52.90	46.26	114.21	127.16	97.05
12.06	54	216	2.38	2.42	2.15	52.44	53.15	47.39	124.67	128.36	101.94
12.73	57	228	2.43	2.43	2.20	53.42	53.37	48.37	129.71	129.45	106.19
13.4	60	240	2.36	2.42	2.23	51.71	53.29	49.16	122.01	129.14	109.74
14.07	63	252	2.25	2.40	2.25	49.40	52.68	49.56	110.98	126.31	111.63
14.74	66	264	2.30	2.36	2.25	50.73	51.90	49.54	116.64	122.54	111.57

15.41	69	276	2.40	2.33	2.25	52.86	51.33	49.56	126.71	119.85	111.64
16.08	72	288	2.44	2.31	2.25	53.69	50.80	49.61	131.08	117.40	111.86
16.75	75	300	2.37	2.28	2.25	51.82	50.08	49.50	122.56	114.14	111.42
17.42	78	312	2.24	2.24	2.24	49.25	49.33	49.21	110.32	110.73	110.10
18.09	81	324	2.29	2.22	2.23	50.53	48.90	49.12	115.72	108.74	109.68
18.76	84	336	2.39	2.21	2.24	52.63	48.71	49.19	125.61	107.86	109.95
19.43	87	348	2.43	2.21	2.24	53.43	48.57	49.27	129.81	107.25	110.34
20.1	90	360	2.35	2.19	2.24	51.53	48.25	49.20	121.20	105.90	110.07
20.77	93	372	2.24	2.18	2.23	49.16	47.92	49.07	109.94	104.42	109.47
21.44	96	384	2.29	2.18	2.23	50.44	47.91	49.15	115.32	104.32	109.77
22.11	99	396	2.38	2.19	2.24	52.54	48.13	49.37	125.16	105.25	110.75
22.78	102	408	2.42	2.20	2.25	53.31	48.39	49.60	129.22	106.38	111.80
23.45	105	420	2.34	2.20	2.26	51.36	48.42	49.66	120.41	106.58	112.11
24.12	108	432	2.22	2.19	2.25	48.91	48.28	49.55	108.83	105.97	111.60
24.79	111	444	2.28	2.20	2.26	50.20	48.50	49.69	114.20	106.86	112.18
25.46	114	456	2.37	2.22	2.27	52.30	48.92	49.96	124.03	108.71	113.40
26.13	117	468	2.41	2.24	2.28	53.06	49.34	50.23	128.01	110.62	114.63
26.8	120	480	2.33	2.25	2.29	51.09	49.51	50.31	119.16	111.42	115.05
27.47	123	492	2.22	2.25	2.28	48.79	49.46	50.25	108.25	111.16	114.78
28.14	126	504	2.27	2.26	2.29	50.07	49.74	50.41	113.62	112.39	115.48
28.81	129	516	2.37	2.28	2.30	52.17	50.21	50.70	123.42	114.50	116.78
29.48	132	528	2.41	2.30	2.32	52.90	50.64	50.97	127.27	116.52	118.03
30.15	135	540	2.32	2.31	2.32	50.89	50.79	51.03	118.26	117.26	118.39
30.82	138	552	2.21	2.30	2.31	48.57	50.68	50.91	107.29	116.73	117.84
31.49	141	564	2.26	2.31	2.32	49.86	50.90	51.03	112.64	117.69	118.32
32.16	144	576	2.36	2.33	2.33	51.96	51.28	51.26	122.41	119.45	119.38
32.83	147	588	2.40	2.35	2.34	52.68	51.61	51.46	126.18	121.03	120.34

33.5	150	600	2.31	2.35	2.34	50.64	51.63	51.45	117.10	121.21	120.36
34.17	153	612	2.20	2.34	2.33	48.42	51.42	51.30	106.61	120.22	119.65
34.84	156	624	2.25	2.34	2.33	49.70	51.52	51.36	111.97	120.61	119.87
35.51	159	636	2.35	2.35	2.34	51.81	51.77	51.52	121.70	121.78	120.64
36.18	162	648	2.39	2.36	2.35	52.50	51.97	51.66	125.34	122.74	121.29
36.85	165	660	2.30	2.36	2.35	50.43	51.85	51.58	116.12	122.26	120.99
37.52	168	672	2.19	2.34	2.33	48.21	51.53	51.36	105.70	120.73	119.93
38.19	171	684	2.24	2.34	2.33	49.50	51.50	51.34	111.04	120.56	119.80
38.86	174	696	2.34	2.35	2.34	51.60	51.63	51.43	120.74	121.16	120.23
39.53	177	708	2.38	2.35	2.34	52.28	51.72	51.50	124.29	121.57	120.54
40.2	180	720	2.29	2.34	2.33	50.18	51.49	51.35	114.99	120.58	119.90

4. Pada Beban R = 100 Ω, dan L = 20 mH

t (ms)	Mekanikal (deg)	Elektrikal (deg)	IDC (Amp DC)			VDC (Volt DC)			Daya Output (Watt)		
			47 µF	470 µF	680 µF	47 µF	470 µF	680 µF	47 µF	470 µF	680 µF
0.00	0.00	0.00	0.00	0.00	0.00	0.00	0.00	0.00	0.00	0.00	0.00
0.67	3.00	12.00	0.05	0.01	0.00	4.94	0.54	0.37	0.27	0.00	0.00
1.34	6.00	24.00	0.30	0.03	0.02	17.36	2.11	1.47	5.18	0.07	0.04
2.01	9.00	36.00	0.75	0.10	0.07	31.92	4.63	3.24	23.80	0.46	0.22
2.68	12.00	48.00	1.27	0.20	0.14	43.11	7.89	5.57	54.65	1.57	0.78
3.35	15.00	60.00	1.72	0.33	0.23	49.53	11.57	8.25	85.18	3.82	1.93
4.02	18.00	72.00	2.05	0.48	0.35	52.86	15.55	11.20	108.17	7.53	3.87
4.69	21.00	84.00	2.26	0.66	0.48	54.57	20.16	14.69	123.23	13.31	7.00
5.36	24.00	96.00	2.39	0.86	0.63	55.29	25.28	18.65	131.95	21.77	11.71
6.03	27.00	108.00	2.44	1.08	0.80	54.23	30.62	22.89	132.47	33.12	18.27
6.70	30.00	120.00	2.41	1.31	0.98	50.24	35.75	27.14	120.94	46.91	26.63
7.37	33.00	132.00	2.27	1.54	1.17	45.50	40.30	31.14	103.50	61.92	36.32
8.04	36.00	144.00	2.17	1.74	1.34	46.52	43.92	34.65	101.12	76.43	46.56
8.71	39.00	156.00	2.19	1.91	1.50	50.71	46.86	37.66	111.31	89.68	56.67
9.38	42.00	168.00	2.30	2.07	1.65	54.14	49.71	40.70	124.55	102.66	67.29
10.05	45.00	180.00	2.38	2.20	1.79	53.33	52.12	43.54	126.95	114.64	78.12
10.72	48.00	192.00	2.36	2.31	1.92	49.91	53.75	45.94	117.58	124.24	88.35
11.39	51.00	204.00	2.31	2.39	2.03	50.26	54.38	47.67	116.16	129.97	96.95
12.06	54.00	216.00	2.33	2.43	2.12	52.83	54.46	48.77	123.06	132.59	103.30
12.73	57.00	228.00	2.39	2.46	2.18	54.58	54.47	49.73	130.59	133.80	108.55
13.40	60.00	240.00	2.42	2.46	2.23	52.63	54.14	50.47	127.33	133.36	112.74
14.07	63.00	252.00	2.35	2.45	2.27	48.57	53.30	50.80	114.04	130.68	115.34
14.74	66.00	264.00	2.28	2.42	2.29	49.15	52.38	50.71	111.94	127.00	116.10

15.41	69.00	276.00	2.29	2.39	2.30	52.27	51.67	50.71	119.90	123.60	116.53
16.08	72.00	288.00	2.37	2.36	2.30	54.52	51.00	50.73	129.15	120.39	116.78
16.75	75.00	300.00	2.41	2.33	2.30	52.82	50.15	50.58	127.30	116.74	116.45
17.42	78.00	312.00	2.35	2.29	2.30	49.06	49.33	50.24	115.44	113.02	115.35
18.09	81.00	324.00	2.29	2.26	2.29	49.53	48.82	50.15	113.45	110.27	114.76
18.76	84.00	336.00	2.31	2.23	2.28	52.41	48.58	50.21	120.87	108.55	114.71
19.43	87.00	348.00	2.38	2.22	2.28	54.40	48.41	50.28	129.21	107.41	114.87
20.10	90.00	360.00	2.41	2.21	2.28	52.51	48.08	50.19	126.43	106.02	114.64
20.77	93.00	372.00	2.34	2.19	2.28	48.59	47.74	50.03	113.78	104.56	114.10
21.44	96.00	384.00	2.27	2.18	2.28	49.11	47.73	50.07	111.68	104.01	114.02
22.11	99.00	396.00	2.29	2.18	2.28	52.11	47.97	50.24	119.31	104.44	114.49
22.78	102.00	408.00	2.36	2.18	2.28	54.19	48.27	50.43	127.95	105.35	115.17
23.45	105.00	420.00	2.40	2.19	2.29	52.33	48.34	50.43	125.41	105.86	115.42
24.12	108.00	432.00	2.33	2.19	2.29	48.60	48.23	50.25	113.49	105.72	114.97
24.79	111.00	444.00	2.27	2.19	2.29	49.12	48.47	50.31	111.58	106.39	115.04
25.46	114.00	456.00	2.29	2.21	2.29	52.06	48.93	50.51	119.12	107.89	115.62
26.13	117.00	468.00	2.36	2.22	2.30	54.04	49.40	50.70	127.44	109.74	116.37
26.80	120.00	480.00	2.39	2.24	2.30	52.08	49.61	50.70	124.48	110.99	116.65
27.47	123.00	492.00	2.32	2.25	2.30	48.28	49.58	50.59	112.25	111.35	116.40
28.14	126.00	504.00	2.26	2.25	2.30	48.82	49.88	50.67	110.29	112.42	116.59
28.81	129.00	516.00	2.28	2.27	2.30	51.81	50.37	50.88	117.90	114.20	117.28
29.48	132.00	528.00	2.35	2.29	2.31	53.82	50.84	51.08	126.29	116.18	118.09
30.15	135.00	540.00	2.38	2.30	2.32	51.85	51.01	51.09	123.37	117.39	118.39
30.82	138.00	552.00	2.32	2.31	2.32	48.19	50.90	50.91	111.62	117.50	117.97
31.49	141.00	564.00	2.25	2.31	2.32	48.74	51.11	50.95	109.82	118.24	118.01
32.16	144.00	576.00	2.27	2.32	2.32	51.71	51.48	51.12	117.42	119.62	118.51
32.83	147.00	588.00	2.34	2.34	2.32	53.66	51.82	51.27	125.61	121.09	119.12

33.50	150.00	600.00	2.37	2.35	2.33	51.61	51.83	51.22	122.41	121.67	119.18
34.17	153.00	612.00	2.31	2.35	2.33	47.93	51.60	51.04	110.56	121.19	118.67
34.84	156.00	624.00	2.24	2.35	2.32	48.49	51.66	51.06	108.74	121.28	118.57
35.51	159.00	636.00	2.26	2.35	2.32	51.49	51.89	51.19	116.37	121.99	118.93
36.18	162.00	648.00	2.33	2.36	2.33	53.44	52.07	51.31	124.56	122.75	119.38
36.85	165.00	660.00	2.36	2.36	2.33	51.37	51.93	51.22	121.31	122.61	119.27
37.52	168.00	672.00	2.30	2.36	2.33	47.78	51.57	50.98	109.78	121.50	118.53
38.19	171.00	684.00	2.23	2.35	2.32	48.36	51.51	50.94	108.09	120.97	118.21
38.86	174.00	696.00	2.25	2.35	2.32	51.35	51.61	51.03	115.72	121.07	118.35
39.53	177.00	708.00	2.32	2.35	2.32	53.26	51.67	51.10	123.75	121.26	118.57
40.20	180.00	720.00	2.35	2.35	2.32	51.12	51.42	50.96	120.29	120.59	118.24

F. Tabel Hasil Simulasi Torsi *Cogging* Generator Sinkron Magnet Permanen Jenis Ceramic 11

t (ms)	Mekanikal (deg)	Elektrikal (deg)	Torsi *Cogging* (Nm)
0	0	0	-0.0000380
0.11	0.5	2	0.0019393
0.22	1	4	0.0034810
0.33	1.5	6	0.0041804
0.44	2	8	0.0038049
0.55	2.5	10	0.0022374
0.66	3	12	-0.0004125
0.77	3.5	14	-0.0037796
0.88	4	16	-0.0074057
0.99	4.5	18	-0.0106685
1.1	5	20	-0.0129806
1.21	5.5	22	-0.0138182
1.32	6	24	-0.0128795
1.43	6.5	26	-0.0101431
1.54	7	28	-0.0058921
1.65	7.5	30	-0.0007295
1.76	8	32	0.0045693
1.87	8.5	34	0.0091726
1.98	9	36	0.0124251
2.09	9.5	38	0.0139196
2.2	10	40	0.0136014
2.31	10.5	42	0.0116886
2.42	11	44	0.0086438
2.53	11.5	46	0.0050496
2.64	12	48	0.0015321
2.75	12.5	50	-0.0014106
2.86	13	52	-0.0033591
2.97	13.5	54	-0.0041213
3.08	14	56	-0.0037401
3.19	14.5	58	-0.0024396
3.3	15	60	-0.0005674

LAMPIRAN IV

Perbandingan Tegangan dan Arus pada Perubahan Nilai Tahanan

A. Tabel Hasil Simulasi Perubahan Nilai Tahanan Pada Generator Sinkron Magnet Permanen.

t (ms)	Tegangan (Volt)										Arus (Ampere)									
	100 ohm	90 ohm	80 ohm	70 ohm	60 ohm	50 ohm	40 ohm	30 ohm	20 ohm	10 ohm	100 ohm	90 ohm	80 ohm	70 ohm	60 ohm	50 ohm	40 ohm	30 ohm	20 ohm	10 ohm
0.00	0.00	0.00	0.00	0.00	0.00	0.00	0.00	0.00	0.00	0.00	0.00	0.00	0.00	0.00	0.00	0.00	0.00	0.00	0.00	0.00
0.67	154.03	144.73	134.53	123.28	110.87	97.13	81.86	64.85	45.80	24.36	1.54	1.61	1.68	1.76	1.85	1.94	2.05	2.16	2.29	2.44
1.34	199.22	190.49	180.97	172.43	161.62	147.95	130.67	108.80	81.04	45.63	1.99	2.12	2.26	2.46	2.69	2.96	3.27	3.63	4.05	4.56
2.01	234.63	227.99	219.73	209.25	196.25	179.07	158.27	134.13	105.34	62.94	2.35	2.53	2.75	2.99	3.27	3.58	3.96	4.47	5.27	6.29
2.68	243.15	239.18	233.80	226.40	216.39	202.23	183.32	157.67	121.56	74.26	2.43	2.66	2.92	3.23	3.61	4.04	4.58	5.26	6.08	7.43
3.35	238.18	236.55	233.95	229.88	223.58	213.45	198.30	175.15	140.38	86.95	2.38	2.63	2.92	3.28	3.73	4.27	4.96	5.84	7.02	8.69
4.02	227.34	227.48	227.15	225.96	223.26	217.66	207.53	189.36	157.71	102.12	2.27	2.53	2.84	3.23	3.72	4.35	5.19	6.31	7.89	10.21
4.69	215.96	217.05	218.05	218.71	218.58	216.56	210.98	198.15	171.23	116.09	2.16	2.41	2.73	3.12	3.64	4.33	5.27	6.61	8.56	11.61
5.36	213.26	205.02	199.34	201.53	203.57	204.74	203.60	196.71	176.54	125.73	2.13	2.28	2.49	2.88	3.39	4.09	5.09	6.56	8.83	12.57
6.03	234.65	229.23	222.67	222.17	201.25	187.57	183.42	182.76	171.06	128.80	2.35	2.55	2.78	3.17	3.35	3.75	4.59	6.09	8.55	12.88
6.70	234.78	232.09	228.12	220.45	214.58	205.70	199.98	169.04	156.53	125.69	2.35	2.58	2.85	3.15	3.58	4.11	5.00	5.63	7.83	12.57
7.37	226.18	225.83	224.80	221.68	218.72	213.19	208.03	184.82	161.53	117.57	2.26	2.51	2.81	3.17	3.65	4.26	5.20	6.16	8.08	11.76
8.04	215.28	216.18	216.86	216.61	216.08	213.77	210.69	194.88	174.22	122.15	2.15	2.40	2.71	3.09	3.60	4.28	5.27	6.50	8.71	12.21
8.71	214.97	206.62	198.37	200.17	201.90	202.75	202.76	194.20	178.70	131.29	2.15	2.30	2.48	2.86	3.37	4.05	5.07	6.47	8.94	13.13
9.38	235.12	229.74	223.30	221.07	204.43	190.36	182.42	180.73	172.45	133.55	2.35	2.55	2.79	3.16	3.41	3.81	4.56	6.02	8.62	13.36
10.05	234.91	232.26	228.59	220.81	214.09	206.90	199.54	168.40	157.29	129.33	2.35	2.58	2.86	3.15	3.57	4.14	4.99	5.61	7.86	12.93
10.72	226.12	225.81	224.90	221.77	218.51	213.90	208.22	184.51	161.44	119.90	2.26	2.51	2.81	3.17	3.64	4.28	5.21	6.15	8.07	11.99
11.39	214.94	215.86	216.61	216.41	215.81	214.01	211.02	194.53	174.09	109.61	2.15	2.40	2.71	3.09	3.60	4.28	5.28	6.48	8.70	10.96
12.06	216.10	207.63	198.94	199.63	201.38	202.51	202.88	193.68	178.41	120.18	2.16	2.31	2.49	2.85	3.36	4.05	5.07	6.46	8.92	12.02
12.73	235.36	229.98	223.66	220.56	204.28	190.34	182.14	180.04	171.97	123.81	2.35	2.56	2.80	3.15	3.40	3.81	4.55	6.00	8.60	12.38
13.40	234.91	232.30	228.75	220.93	213.62	206.81	199.22	168.87	156.67	120.70	2.35	2.58	2.86	3.16	3.56	4.14	4.98	5.63	7.83	12.07
14.07	225.99	225.71	224.88	221.77	218.23	213.83	207.75	184.98	161.74	112.14	2.26	2.51	2.81	3.17	3.64	4.28	5.19	6.17	8.09	11.21
14.74	214.57	215.52	216.32	216.16	215.45	213.78	210.35	194.75	174.24	101.59	2.15	2.39	2.70	3.09	3.59	4.28	5.26	6.49	8.71	10.16

15.41	217.20	208.61	199.82	199.03	200.76	201.99	201.96	193.55	178.31	112.79	2.17	2.32	2.50	2.84	3.35	4.04	5.05	6.45	8.92	11.28
16.08	235.57	230.21	223.90	219.99	205.98	190.88	181.14	179.60	171.63	117.25	2.36	2.56	2.80	3.14	3.43	3.82	4.53	5.99	8.58	11.72
16.75	234.90	232.32	228.80	221.09	214.08	206.99	198.70	169.50	156.16	114.96	2.35	2.58	2.86	3.16	3.57	4.14	4.97	5.65	7.81	11.50
17.42	225.87	225.62	224.82	221.78	218.29	213.92	207.67	185.51	162.94	107.21	2.26	2.51	2.81	3.17	3.64	4.28	5.19	6.18	8.15	10.72
18.09	214.20	215.19	216.01	215.93	215.28	213.65	210.34	195.00	175.09	100.91	2.14	2.39	2.70	3.08	3.59	4.27	5.26	6.50	8.75	10.09
18.76	218.35	209.63	200.71	198.44	200.24	201.51	201.74	193.42	178.74	112.31	2.18	2.33	2.51	2.83	3.34	4.03	5.04	6.45	8.94	11.23
19.43	235.82	230.47	224.16	219.45	207.03	191.34	180.62	179.17	171.70	116.68	2.36	2.56	2.80	3.13	3.45	3.83	4.52	5.97	8.58	11.67
20.10	234.92	232.36	228.87	221.23	213.52	207.12	198.28	170.90	155.96	114.35	2.35	2.58	2.86	3.16	3.56	4.14	4.96	5.70	7.80	11.44
20.77	225.75	225.53	224.76	221.79	218.03	213.99	207.29	186.48	164.52	106.66	2.26	2.51	2.81	3.17	3.63	4.28	5.18	6.22	8.23	10.67
21.44	213.84	214.85	215.71	215.69	214.93	213.50	209.84	195.54	176.25	103.14	2.14	2.39	2.70	3.08	3.58	4.27	5.25	6.52	8.81	10.31
22.11	219.45	210.61	201.57	197.85	199.62	201.03	201.01	193.48	179.41	114.13	2.19	2.34	2.52	2.83	3.33	4.02	5.03	6.45	8.97	11.41
22.78	236.05	230.70	224.40	218.90	209.00	191.79	179.76	178.86	171.95	118.10	2.36	2.56	2.80	3.13	3.48	3.84	4.49	5.96	8.60	11.81
23.45	234.90	232.37	228.91	221.21	213.30	207.25	197.80	172.92	155.91	115.44	2.35	2.58	2.86	3.16	3.55	4.14	4.95	5.76	7.80	11.54
24.12	225.60	225.41	224.67	221.76	217.96	214.03	207.12	187.88	166.11	107.51	2.26	2.50	2.81	3.17	3.63	4.28	5.18	6.26	8.31	10.75
24.79	213.45	214.49	215.38	215.41	214.65	213.33	209.68	196.36	177.40	105.13	2.13	2.38	2.69	3.08	3.58	4.27	5.24	6.55	8.87	10.51
25.46	220.54	211.57	202.41	197.23	199.02	200.52	200.63	193.72	180.07	115.75	2.21	2.35	2.53	2.82	3.32	4.01	5.02	6.46	9.00	11.58
26.13	236.25	230.92	224.61	218.31	210.90	192.23	179.12	178.67	172.19	119.35	2.36	2.57	2.81	3.12	3.51	3.84	4.48	5.96	8.61	11.93
26.80	234.87	232.36	228.94	221.21	214.06	207.36	197.34	175.13	155.84	116.37	2.35	2.58	2.86	3.16	3.57	4.15	4.93	5.84	7.79	11.64
27.47	225.46	225.29	224.59	221.76	218.26	214.07	206.77	189.40	167.57	108.17	2.25	2.50	2.81	3.17	3.64	4.28	5.17	6.31	8.38	10.82
28.14	213.07	214.13	215.05	215.14	214.52	213.15	209.24	197.26	178.45	106.08	2.13	2.38	2.69	3.07	3.58	4.26	5.23	6.58	8.92	10.61
28.81	221.67	212.58	203.29	196.62	198.47	200.02	199.98	194.03	180.65	116.47	2.22	2.36	2.54	2.81	3.31	4.00	5.00	6.47	9.03	11.65
29.48	236.49	231.16	224.86	217.73	214.04	192.70	178.08	178.52	172.37	119.82	2.36	2.57	2.81	3.11	3.57	3.85	4.45	5.95	8.62	11.98
30.15	234.85	232.38	228.98	221.77	215.68	207.49	196.94	177.38	155.74	116.62	2.35	2.58	2.86	3.17	3.59	4.15	4.92	5.91	7.79	11.66
30.82	225.31	225.18	224.50	221.94	218.93	214.12	206.59	190.96	167.45	108.25	2.25	2.50	2.81	3.17	3.65	4.28	5.16	6.37	8.37	10.82
31.49	212.68	213.76	214.72	214.93	214.55	212.98	209.03	198.19	178.31	106.50	2.13	2.38	2.68	3.07	3.58	4.26	5.23	6.61	8.92	10.65
32.16	222.75	213.54	204.12	196.01	197.98	199.51	199.53	194.35	180.36	116.72	2.23	2.37	2.55	2.80	3.30	3.99	4.99	6.48	9.02	11.67
32.83	236.69	231.38	225.08	217.07	216.89	193.13	178.22	178.38	171.89	119.88	2.37	2.57	2.81	3.10	3.61	3.86	4.46	5.95	8.59	11.99

33.50	234.81	232.36	228.99	223.24	217.18	207.59	196.71	179.61	155.09	116.53	2.35	2.58	2.86	3.19	3.62	4.15	4.92	5.99	7.75	11.65
34.17	225.14	225.03	224.39	222.43	219.56	214.14	206.39	192.48	166.84	108.04	2.25	2.50	2.80	3.18	3.66	4.28	5.16	6.42	8.34	10.80
34.84	212.26	213.38	214.36	214.82	214.57	212.78	208.70	199.09	177.74	106.96	2.12	2.37	2.68	3.07	3.58	4.26	5.22	6.64	8.89	10.70
35.51	223.81	214.47	204.93	195.41	197.48	198.98	198.94	194.64	179.68	116.99	2.24	2.38	2.56	2.79	3.29	3.98	4.97	6.49	8.98	11.70
36.18	236.88	231.58	225.28	217.53	216.28	193.55	179.09	178.23	171.11	119.97	2.37	2.57	2.82	3.11	3.60	3.87	4.48	5.94	8.56	12.00
36.85	234.75	232.33	228.99	224.22	217.12	207.68	197.08	181.80	154.25	116.45	2.35	2.58	2.86	3.20	3.62	4.15	4.93	6.06	7.71	11.64
37.52	224.96	224.88	224.27	222.75	219.52	214.16	206.63	194.00	166.30	107.86	2.25	2.50	2.80	3.18	3.66	4.28	5.17	6.47	8.32	10.79
38.19	211.85	212.99	214.00	214.65	214.34	212.57	208.68	199.98	177.26	107.61	2.12	2.37	2.68	3.07	3.57	4.25	5.22	6.67	8.86	10.76
38.86	224.91	215.45	205.78	195.83	196.94	198.45	198.57	194.92	179.10	117.43	2.25	2.39	2.57	2.80	3.28	3.97	4.96	6.50	8.96	11.74
39.53	237.10	231.80	225.51	218.04	215.97	194.03	179.31	178.07	170.41	120.19	2.37	2.58	2.82	3.11	3.60	3.88	4.48	5.94	8.52	12.02
40.20	234.70	232.31	229.00	224.48	217.12	207.77	197.12	184.03	153.44	116.50	2.35	2.58	2.86	3.21	3.62	4.16	4.93	6.13	7.67	11.65

B. Tabel Hasil Simulasi Perubahan Nilai Tahanan Pada Generator Sinkron Magnet Permanen Menggunakan Magnet Permanen Jenis Ceramic 11.

t (ms)	Tegangan (Volt)										Arus (Ampere)									
	100 ohm	90 ohm	80 ohm	70 ohm	60 ohm	50 ohm	40 ohm	30 ohm	20 ohm	10 ohm	100 ohm	90 ohm	80 ohm	70 ohm	60 ohm	50 ohm	40 ohm	30 ohm	20 ohm	10 ohm
0.00	0.00	0.00	0.00	0.00	0.00	0.00	0.00	0.00	0.00	0.00	0.00	0.00	0.00	0.00	0.00	0.00	0.00	0.00	0.00	0.00
0.67	44.91	42.17	39.17	35.86	32.22	28.20	23.75	18.79	13.25	7.04	0.45	0.47	0.49	0.51	0.54	0.56	0.59	0.63	0.66	0.70
1.34	58.63	56.02	53.13	50.55	47.31	43.24	38.11	31.66	23.53	13.21	0.59	0.62	0.66	0.72	0.79	0.86	0.95	1.06	1.18	1.32
2.01	69.27	67.27	64.80	61.66	57.84	52.71	46.54	39.23	30.71	18.27	0.69	0.75	0.81	0.88	0.96	1.05	1.16	1.31	1.54	1.83
2.68	71.76	70.56	68.94	66.72	63.77	59.51	53.88	46.23	35.62	21.60	0.72	0.78	0.86	0.95	1.06	1.19	1.35	1.54	1.78	2.16
3.35	70.12	69.62	68.83	67.59	65.70	62.66	58.13	51.29	40.94	25.37	0.70	0.77	0.86	0.97	1.10	1.25	1.45	1.71	2.05	2.54
4.02	67.04	67.06	66.93	66.54	65.69	63.96	60.87	55.41	45.93	29.66	0.67	0.75	0.84	0.95	1.09	1.28	1.52	1.85	2.30	2.97
4.69	63.87	64.18	64.45	64.62	64.54	63.87	62.11	58.19	50.03	33.76	0.64	0.71	0.81	0.92	1.08	1.28	1.55	1.94	2.50	3.38
5.36	62.94	60.53	59.05	59.70	60.29	60.62	60.23	58.09	51.92	36.79	0.63	0.67	0.74	0.85	1.00	1.21	1.51	1.94	2.60	3.68
6.03	69.19	67.56	65.58	66.00	59.07	55.33	54.28	54.07	50.49	37.87	0.69	0.75	0.82	0.94	0.98	1.11	1.36	1.80	2.52	3.79
6.70	69.11	68.32	67.13	64.75	63.20	60.35	58.86	49.70	46.16	36.98	0.69	0.76	0.84	0.93	1.05	1.21	1.47	1.66	2.31	3.70
7.37	66.69	66.57	66.24	65.24	64.41	62.62	61.16	54.22	47.16	34.50	0.67	0.74	0.83	0.93	1.07	1.25	1.53	1.81	2.36	3.45
8.04	63.66	63.92	64.10	63.97	63.81	63.03	62.11	57.32	51.01	35.71	0.64	0.71	0.80	0.91	1.06	1.26	1.55	1.91	2.55	3.57
8.71	63.45	61.03	58.75	59.27	59.80	60.01	60.02	57.41	52.64	38.63	0.63	0.68	0.73	0.85	1.00	1.20	1.50	1.91	2.63	3.86
9.38	69.33	67.73	65.79	65.33	60.53	56.07	53.99	53.50	50.97	39.47	0.69	0.75	0.82	0.93	1.01	1.12	1.35	1.78	2.55	3.95
10.05	69.15	68.36	67.28	65.00	63.04	60.69	58.55	49.50	46.43	38.25	0.69	0.76	0.84	0.93	1.05	1.21	1.46	1.65	2.32	3.82
10.72	66.68	66.57	66.28	65.32	64.32	62.83	61.12	54.13	47.21	35.36	0.67	0.74	0.83	0.93	1.07	1.26	1.53	1.80	2.36	3.54
11.39	63.57	63.84	64.03	63.94	63.73	63.10	62.18	57.22	51.04	32.15	0.64	0.71	0.80	0.91	1.06	1.26	1.55	1.91	2.55	3.22
12.06	63.78	61.35	58.80	59.13	59.70	59.95	60.05	57.25	52.62	35.42	0.64	0.68	0.73	0.84	0.99	1.20	1.50	1.91	2.63	3.54
12.73	69.40	67.80	65.91	65.19	60.25	56.08	53.91	53.29	50.87	36.62	0.69	0.75	0.82	0.93	1.00	1.12	1.35	1.78	2.54	3.66
13.40	69.14	68.38	67.33	65.03	62.85	60.68	58.59	49.63	46.27	35.71	0.69	0.76	0.84	0.93	1.05	1.21	1.46	1.65	2.31	3.57

14.07	66.64	66.55	66.28	65.32	64.22	62.82	61.05	54.26	47.31	33.08	0.67	0.74	0.83	0.93	1.07	1.26	1.53	1.81	2.37	3.31
14.74	63.46	63.74	63.95	63.87	63.62	63.05	62.00	57.29	51.10	29.81	0.63	0.71	0.80	0.91	1.06	1.26	1.55	1.91	2.56	2.98
15.41	64.10	61.62	59.07	58.95	59.46	59.79	59.78	57.22	52.60	33.23	0.64	0.68	0.74	0.84	0.99	1.20	1.49	1.91	2.63	3.32
16.08	69.47	67.87	65.99	64.94	60.79	56.23	53.56	53.16	50.77	34.65	0.69	0.75	0.82	0.93	1.01	1.12	1.34	1.77	2.54	3.47
16.75	69.14	68.38	67.35	65.10	62.88	60.74	58.35	50.00	46.12	33.97	0.69	0.76	0.84	0.93	1.05	1.21	1.46	1.67	2.31	3.40
17.42	66.61	66.52	66.27	65.34	64.21	62.86	61.00	54.38	47.65	31.57	0.67	0.74	0.83	0.93	1.07	1.26	1.53	1.81	2.38	3.16
18.09	63.36	63.59	63.87	63.81	63.55	63.02	62.01	57.35	51.35	29.56	0.63	0.71	0.80	0.91	1.06	1.26	1.55	1.91	2.57	2.96
18.76	64.43	61.91	59.34	58.76	59.29	59.66	59.73	57.17	52.73	33.07	0.64	0.69	0.74	0.84	0.99	1.19	1.49	1.91	2.64	3.31
19.43	69.54	67.94	66.07	64.77	61.21	56.34	53.46	53.02	50.79	34.45	0.70	0.75	0.83	0.93	1.02	1.13	1.34	1.77	2.54	3.45
20.10	69.14	68.39	67.37	65.16	62.82	60.78	58.28	50.13	46.06	33.76	0.69	0.76	0.84	0.93	1.05	1.22	1.46	1.67	2.30	3.38
20.77	66.58	66.50	66.26	65.35	64.19	62.88	60.90	54.66	48.11	31.38	0.67	0.74	0.83	0.93	1.07	1.26	1.52	1.82	2.41	3.14
21.44	63.26	63.54	63.78	63.75	63.48	62.98	61.85	57.51	51.69	30.20	0.63	0.71	0.80	0.91	1.06	1.26	1.55	1.92	2.58	3.02
22.11	64.75	62.19	59.57	58.60	59.12	59.52	59.50	57.19	52.93	33.58	0.65	0.69	0.74	0.84	0.99	1.19	1.49	1.91	2.65	3.36
22.78	69.60	68.01	66.13	64.58	61.72	56.45	53.18	52.92	50.86	34.86	0.70	0.76	0.83	0.92	1.03	1.13	1.33	1.76	2.54	3.49
23.45	69.14	68.39	67.38	65.16	62.74	60.82	58.07	50.72	46.04	34.08	0.69	0.76	0.84	0.93	1.05	1.22	1.45	1.69	2.30	3.41
24.12	66.54	66.47	66.24	65.35	64.17	62.90	60.84	55.07	48.57	31.62	0.67	0.74	0.83	0.93	1.07	1.26	1.52	1.84	2.43	3.16
24.79	63.15	63.44	63.69	63.67	63.40	62.94	61.82	57.75	52.04	30.78	0.63	0.70	0.80	0.91	1.06	1.26	1.55	1.93	2.60	3.08
25.46	65.06	62.47	59.81	58.42	58.94	59.37	59.40	57.27	53.14	34.07	0.65	0.69	0.75	0.83	0.98	1.19	1.48	1.91	2.66	3.41
26.13	69.66	68.07	66.19	64.35	62.26	56.59	53.00	52.86	50.94	35.24	0.70	0.76	0.83	0.92	1.04	1.13	1.33	1.76	2.55	3.52
26.80	69.13	68.39	67.39	65.15	62.91	60.86	57.99	51.36	46.02	34.36	0.69	0.76	0.84	0.93	1.05	1.22	1.45	1.71	2.30	3.44
27.47	66.51	66.44	66.21	65.35	64.24	62.93	60.76	55.52	49.01	31.82	0.67	0.74	0.83	0.93	1.07	1.26	1.52	1.85	2.45	3.18
28.14	63.04	63.34	63.60	63.60	63.36	62.90	61.70	58.03	52.36	31.07	0.63	0.70	0.79	0.91	1.06	1.26	1.54	1.93	2.62	3.11
28.81	65.38	62.75	60.07	58.23	58.78	59.22	59.20	57.37	53.32	34.29	0.65	0.70	0.75	0.83	0.98	1.18	1.48	1.91	2.67	3.43
29.48	69.73	68.14	66.26	64.17	63.13	56.73	52.99	52.82	51.00	35.39	0.70	0.76	0.83	0.92	1.05	1.13	1.32	1.76	2.55	3.54
30.15	69.12	68.40	67.40	65.24	63.37	60.91	57.92	52.02	45.99	34.43	0.69	0.76	0.84	0.93	1.06	1.22	1.45	1.73	2.30	3.44
30.82	66.47	66.41	66.19	65.34	64.42	62.96	60.75	55.98	49.44	31.84	0.66	0.74	0.83	0.93	1.07	1.26	1.52	1.87	2.47	3.18
31.49	62.93	63.24	63.50	63.53	63.38	62.86	61.67	58.32	52.68	31.20	0.63	0.70	0.79	0.91	1.06	1.26	1.54	1.94	2.63	3.12

32.16	65.69	63.03	60.31	58.05	58.63	59.08	59.09	57.47	53.51	34.37	0.66	0.70	0.75	0.83	0.98	1.18	1.48	1.92	2.68	3.44
32.83	69.79	68.21	66.33	63.97	64.08	56.85	52.62	52.78	51.06	35.41	0.70	0.76	0.83	0.91	1.07	1.14	1.32	1.76	2.55	3.54
33.50	69.10	68.39	67.40	65.53	63.86	60.95	57.69	52.67	45.96	34.40	0.69	0.76	0.84	0.94	1.06	1.22	1.44	1.76	2.30	3.44
34.17	66.42	66.38	66.17	65.49	64.65	62.97	60.60	56.43	49.20	31.78	0.66	0.74	0.83	0.94	1.08	1.26	1.51	1.88	2.46	3.18
34.84	62.81	63.13	63.40	63.49	63.40	62.81	61.52	58.59	52.50	31.33	0.63	0.70	0.79	0.91	1.06	1.26	1.54	1.95	2.62	3.13
35.51	66.00	63.30	60.54	57.87	58.49	58.92	58.89	57.56	53.31	34.45	0.66	0.70	0.76	0.83	0.97	1.18	1.47	1.92	2.67	3.45
36.18	69.85	68.26	66.38	64.00	63.85	56.97	52.77	52.74	50.83	35.43	0.70	0.76	0.83	0.91	1.06	1.14	1.32	1.76	2.54	3.54
36.85	69.09	68.38	67.40	65.94	63.83	60.99	57.75	53.31	45.69	34.38	0.69	0.76	0.84	0.94	1.06	1.22	1.44	1.78	2.28	3.44
37.52	66.38	66.34	66.14	65.64	64.64	62.98	60.64	56.88	48.93	31.72	0.66	0.74	0.83	0.94	1.08	1.26	1.52	1.90	2.45	3.17
38.19	62.69	63.02	63.30	63.47	63.34	62.76	61.51	58.87	52.25	31.53	0.63	0.70	0.79	0.91	1.06	1.26	1.54	1.96	2.61	3.15
38.86	66.31	63.58	60.78	57.90	58.33	58.77	58.77	57.66	53.04	34.59	0.66	0.71	0.76	0.83	0.97	1.18	1.47	1.92	2.65	3.46
39.53	69.91	68.32	66.45	64.23	63.77	57.16	52.85	52.69	50.54	35.50	0.70	0.76	0.83	0.92	1.06	1.14	1.32	1.76	2.53	3.55
40.20	69.07	68.37	67.40	66.07	63.84	60.96	57.77	53.96	45.39	34.39	0.69	0.76	0.84	0.94	1.06	1.22	1.44	1.80	2.27	3.44

LAMPIRAN V

Datasheet

Nidec 日本電産株式会社
–All for dreams

Motors

Brushless DC motor　Inner rotor type

Brushless DC motors for industrial use A6E series [UGBT**-A6E]

The brushless motor ensures long life and high efficiency.

Brushless DC motors do not require commutators and brushes, which are the disadvantages of brush motors. Brushless DC motors are an energy-efficient direct-current drive with long life, noise levels, quietness, and high efficiency.

Product data

Basic information

Power type	DC
Size	130 × 130 mm
L dimension	209 mm
Operation temperature	-20 ～ 40 ℃
Weight	10000 g
Bearing	Ball bearing
Manufacturer name	NIDEC TECHNO MOTOR

Input

Operating voltage	280 V	252 ～ 308 V
Operating current	3.5 A	3.5 ～ 3.5 A

Output

output	750 W	500 ～ 750 W
torque	2400 mN•m	2000 ～ 2400 mN・m
Rated speed	3000 min-1	2500 ～ 3500 min-1
No load revoluting speed	4500 min-1	4500 ～ 4500 min-1

Product details

Electric shutter

Characteristic graph

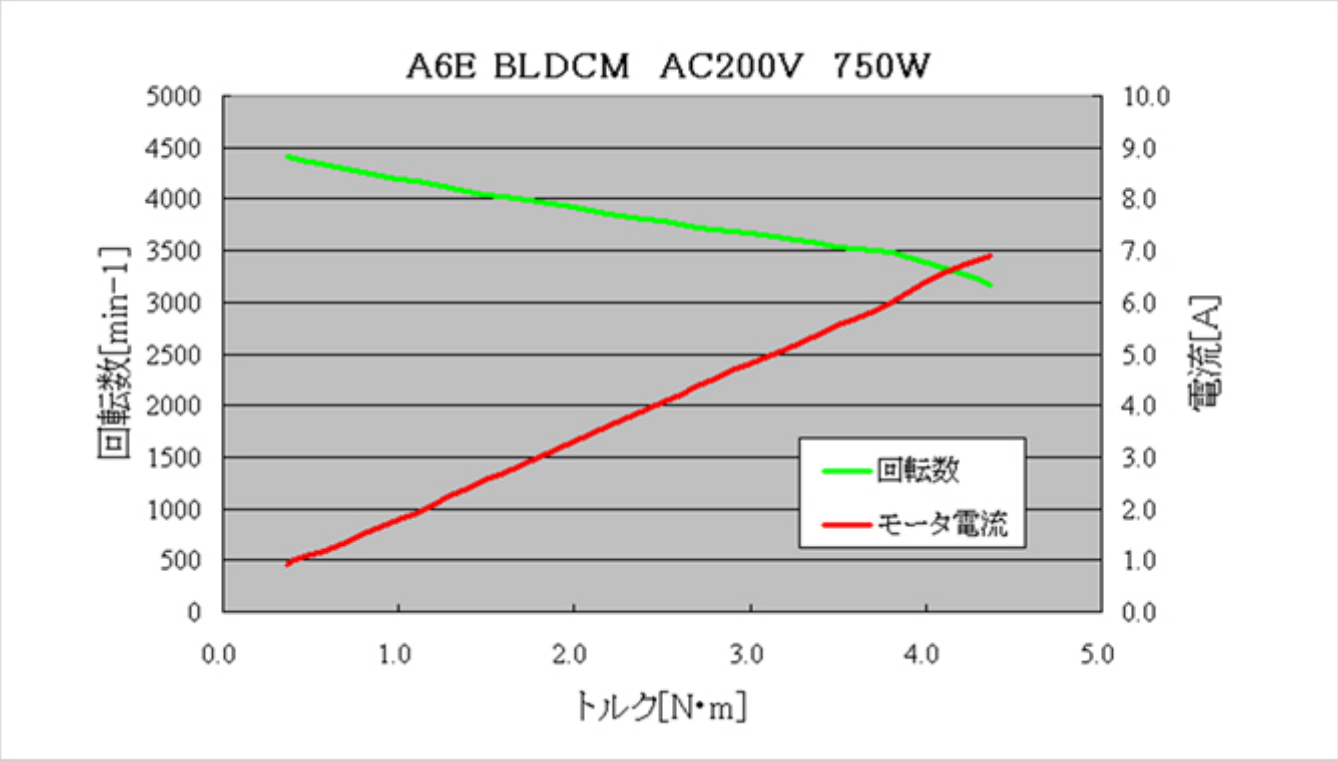

Drawing

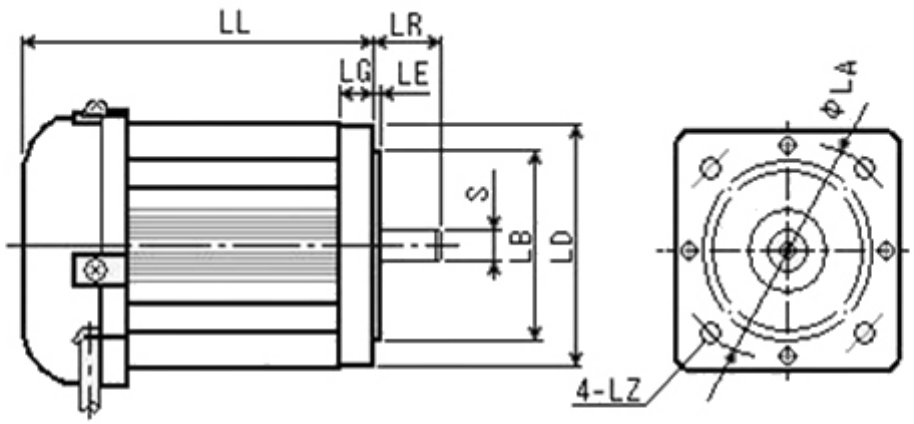

シリーズ	出力 W	LL	LD	LB (h7)	LR	S (h6)	LG	LE	LZ	LA	外形図
A6E	750	182	□130	φ110	40	φ19	16	4	φ9	130	5

Please feel free to consult us.

Inquiry by e-mail

Inquiry About Customization | Quotation Inquiry | Other Inquiry

Copyright © Nidec Corporation 1995-2014 All Rights Reserved.

Advanced Motors & Drives
A Kinetek Company®

AC AND DC MOTORS

ADVANCED POWER FOR COMMERCIAL OR RECREATIONAL VEHICLES OR LIFTS

Advanced Motors & Drives provides a complete line of reliable electric motors, both AC and DC. Our motors will quietly do the job, year after year, keeping your battery-powered vehicle on the course or moving and lifting loads on the factory floor.

We understand that power, performance, reliability, and simplicity are the bedrock requirements on which quality electric vehicles are built. Our motors are designed to serve across a wide range of applications. Our engineering values and market knowledge assure a superior customer experience.

AC Motors

AC motors offer a wide range of speed regulation with constant torque output. Extruded aluminum housings provide optimal thermal dissipation.

- Several levels of mechanical and moisture protection available

DC Motors

DC motors feature heavy duty commutator construction using stainless steel brush springs, heavy duty brass brush boxes, and high temperature brush shunt connections. Armatures and field coils are poly-thermaleze coated.

- High-temp polyester varnish impregnated armature
- Fully impregnated frame and field
- Die cast aluminum drive and commutator endheads

Features

- Heavy duty construction
- High efficiency designs
- Class H insulation
- Sealed bearings
- High temperature lubricant

Applications

- Golf cars
- Neighborhood electric vehicles (NEV)
- Utility vehicles
- Scissor lifts
- Fork lifts

Major Markets: Golf/Utility | Material Handling/Aerial Lift

AC AND DC MOTORS

AC EXAMPLE (ACX-2043-1)

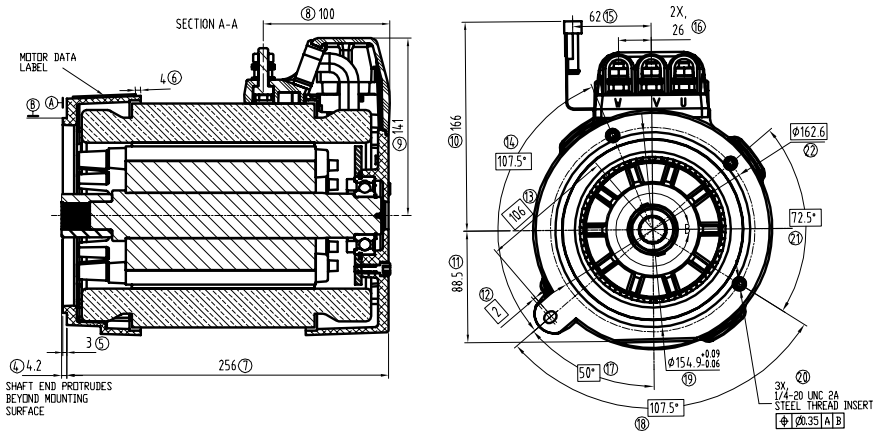

AC DUTY TABLE

TYPE	VOLTAGE	(TO) HP/KW	RPM
5.5"/140 mm	12 - 48	2.0 HP/1.5 kW	0 - 5000
6.7"/170 mm	12 - 96	4.0 HP/3.0 kW	0 - 5000
7.5"/190 mm	12 - 96	5.0 HP/4.0 kW	0 - 5000
8"/ 203 mm	12 - 144	6.0 HP/4.5 kW	0 - 5000
9"/228 mm	12 - 144	10.0 HP/7.5 kW	0 - 5000
11"/280 mm	12 - 48	12.0 HP/9.0 kW	0 - 5000

* Power ratings S-2 60 minutes

DC EXAMPLE (DE3-4009)

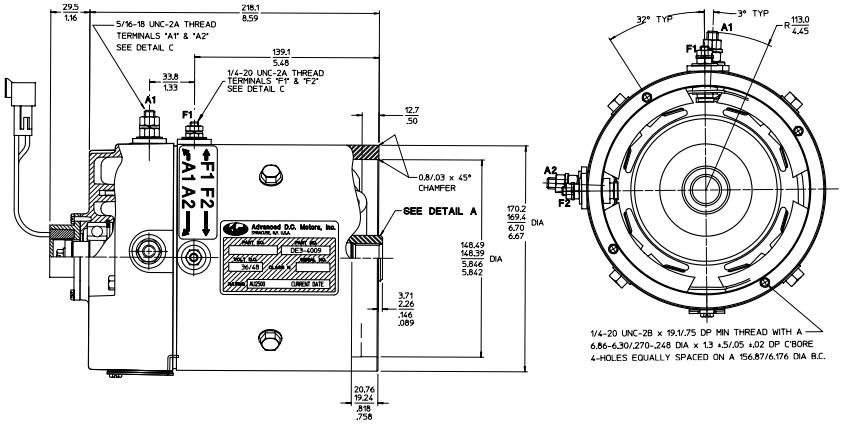

DC DUTY TABLE

TYPE	VOLTAGE	(TO) HP/KW	RPM
4.5"/114 mm	12 - 24	2.0 HP/1.5 kW	0 - 5000
5.5"/140 mm	12 - 48	4.0 HP/3.0 kW	0 - 5000
6.7"/170 mm	12 - 96	9.0 HP/7.0 kW	0 - 5000
8"/ 203 mm	24 - 144	20.0 HP/15.0 kW	0 - 5000
9.1"/231 mm	24 - 144	26.0 HP/19.0 kW	0 - 5000
11"/280 mm	12 - 48	25.0 HP/19.0 kW	0 - 4000

* Power ratings S-2 60 minutes

Advanced Motors & Drives®
A Kinetek Company®

Corporate Headquarters
6268 E. Molloy Road
East Syracuse, NY 13057

315.434.9303 direct
315.432.9290 fax

info@adcmotors.com
www.adcmotors.com

NdFeB Magnets / Neodymium Iron Boron Magnets Datasheet

NdFeB magnets are also know as Neo, Neodymium Iron Boron, NdBFe, NIB, Super Strength, and Rare Earth Magnets (although SmCo also shares this term). This data sheet covers the standard production 55. range of NdFeB magnets (currently 55 grades) that are commonly in use. They are used in nearly all Industries:- Automotive, Aerospace, Wind Turbine, Military, White Goods, Lighting, Food Preparation, Separation, Motor and Generator Industries are just a few example Industries. Our NdFeB magnets are all REACH and ROHS compliant. They do not contain any SVHC. NdFeB is produced to ISO9001 and ISO14001 Quality Control Standards. CofC, with PPAP is available for our NdFeB magnets.TS16949 also is available. NdFeB magnets can be made in blocks, discs, rings, arcs, spheres, triangles, trapezoids and many other shapes as stock and custom items. We manufacture NdFeB assemblies. We have a NDA (Confidentiality Agreement) form if you require peace of mind relating to confidentiality.

The most common range of NdFeB (Nxx versions) will usually operate at up to +80 degrees C. The temperature ratings are guideline values.

Higher temperature versions (NxxM, NxxH, NxxSH, NxxUH, NxxEH, NxxVH/AH) are rated from up to +100 degrees C to a maximum of up to +230 degrees C. The total magnetic circuit (magnet shape, other components, surrounding environmental conditions) can impact on the actual maximum temperature and performance. In some applications the temperature at which significant weakening is seen may be at or slightly above the recommended maximum temperature. In some applications the temperature at which significant weakening is seen may be noticeably below the recommended maximum temperature it depends on the application.

All NdFeB magnets should have some form of protective coating to minimise and ideally prevent corrosion. Uncoated is not advised. The default / standard protective coating is Ni–Cu–Ni plating. Other coatings/finishes exist (over 40 finishes are currently available). Where maximum corrosion resistance is required for NdFeB, consider using the increased corrosion resistance range of NdFeB alloys.

If you require assistance on the grade(s) to select, please contact us. We will safely guide you (and explain it all) based on your requirements. The process may involve discussing confidential details relating to your application – we can do this under NDA / Confidentiality Agreement.

Chinese Standard – commonly used in UK, Europe and now Globally

Minimum Values

Nxx?? Material		Br		Hc (Hcb)		Hci (Hcj)		BHmax	
		mT	G	kA/m	Oe	kA/m	Oe	kJ/m^3	MGOe
N27		1,030	10,300	796	10,000	955	12,000	199	25
N30		1,080	10,800	796	10,000	955	12,000	223	28
N33		1,130	11,300	836	10,500	955	12,000	247	31
N35		1,170	11,700	867	10,900	955	12,000	263	33
N38		1,210	12,100	899	11,300	955	12,000	287	36
N40		1,240	12,400	923	11,600	955	12,000	302	38
N42		1,280	12,800	923	11,600	955	12,000	318	40
N45		1,320	13,200	875	11,000	955	12,000	342	43
N48		1,380	13,800	836	10,500	875	11,000	366	46
N50		1,400	14,000	796	10,000	875	11,000	382	48
N52		1,430	14,300	796	10,000	875	11,000	398	50
N27	M	1,030	10,300	796	10,000	1,114	14,000	199	25
N30	M	1,080	10,800	796	10,000	1,114	14,000	223	28
N33	M	1,130	11,300	836	10,500	1,114	14,000	247	31
N35	M	1,170	11,700	867	10,900	1,114	14,000	263	33
N38	M	1,210	12,100	899	11,300	1,114	14,000	286	36
N40	M	1,240	12,400	923	11,600	1,114	14,000	302	38
N42	M	1,280	12,800	923	11,600	1,114	14,000	318	40
N45	M	1,320	13,200	875	11,000	1,114	14,000	342	43
N48	M	1,370	13,700	1,035	13,000	1,114	14,000	366	46
N50	M	1,400	14,000	1,035	13,000	1,114	14,000	382	48
N27	H	1,030	10,300	796	10,000	1,353	17,000	199	25
N30	H	1,080	10,800	796	10,000	1,353	17,000	223	28
N33	H	1,130	11,300	836	10,500	1,353	17,000	247	31
N35	H	1,170	11,700	867	10,900	1,353	17,000	263	33
N38	H	1,210	12,100	899	11,300	1,353	17,000	286	36
N40	H	1,240	12,400	923	11,600	1,353	17,000	302	38
N42	H	1,280	12,800	955	12,000	1,353	17,000	318	40

Nxx?? Material		Br		Hc (Hcb)		Hci (Hcj)		BHmax	
		mT	G	kA/m	Oe	kA/m	Oe	kJ/m^3	MGOe
N45	H	1,320	13,200	995	12,500	1,353	17,000	342	43
N48	H	1,370	13,700	995	12,500	1,353	17,000	366	46
N50	H	1,400	1,400	995	12,500	1353	17,000	382	48
N27	SH	1,030	10,300	804	10,100	1,592	20,000	199	25
N30	SH	1,080	10,800	804	10,100	1,592	20,000	223	28
N33	SH	1,130	11,300	844	10,600	1,592	20,000	247	31
N35	SH	1,170	11,700	875	11,000	1,592	20,000	263	33
N38	SH	1,210	12,100	907	11,400	1,592	20,000	286	36
N40	SH	1,240	12,400	939	11,800	1,592	20,000	302	38
N42	SH	1,280	12,800	963	12,100	1,592	20,000	318	40
N45	SH	1,320	13,200	1,003	12,600	1,592	20,000	342	43
N27	UH	1,030	10,300	764	9,600	1,989	25,000	199	25
N30	UH	1,080	10,800	812	10,200	1,989	25,000	223	28
N33	UH	1,130	11,300	851	10,700	1,989	25,000	247	31
N35	UH	1,170	11,700	875	11,000	1,989	25,000	263	33
N38	UH	1,210	12,100	875	11,000	1,989	25,000	287	36
N40	UH	1,240	12,400	899	11,300	1,989	25,000	302	38
N42	UH	1,280	1,280	875	11,000	1,989	2,500	318	40
N27	EH	1,030	10,300	780	9,800	2,387	30,000	199	25
N30	EH	1,080	10,800	812	10,200	2,387	30,000	223	28
N33	EH	1,130	11,300	836	10,500	2,387	30,000	247	31
N35	EH	1,170	11,700	875	11,000	2,387	30,000	263	33
N38	EH	1,220	12,200	899	11,300	2,387	30,000	287	36
N27	VH / AH	1,030	10,300	772	9,700	2,785	35,000	199	25
N30	VH / AH	1,080	10,800	812	10,200	2,785	35,000	223	28
N33	VH / AH	1,140	11,400	851	10,700	2,785	35,000	247	31
N35	VH / AH	1,170	11,700	875	11,000	2,785	35,000	263	33

American Standard - not commonly used

Typical Values

Material	Br		Hc (Hcb)		Hci (Hcj)		BHmax	
	mT	G	kA/m	Oe	kA/m	Oe	kJ/m^3	MGOe
24/41	1,000	10,000	764	9,600	3,263	41,000	190	24.0
26/32	1,050	10,500	803	10,090	2,507	31,500	205	26.0
28/23	1,050	10,500	820	10,300	1,830	23,000	225	28.0
28/32	1,073	10,730	835	10,490	2,507	31,500	225	28.0
30/19	1,130	11,300	859	10,800	1,512	19,000	240	30.0
30/27	1,130	11,300	859	10,800	2,149	27,000	240	30.0
32/16	1,180	11,800	891	11,200	1,273	16,000	255	32.0
32/31	1,160	11,600	883	11,100	2,467	31,000	255	32.0
34/22	1,196	11,960	915	11,500	1,771	22,250	270	34.0
36/19	1,231	12,310	917	11,520	1,523	19,140	285	36.0
36/26	1,220	12,200	931	11,700	2,069	26,000	285	36.0
38/15	1,250	12,500	955	12,000	1,194	15,000	300	38.0
38/23	1,240	12,400	955	12,000	1,830	23,000	300	38.0
40/15	1,280	12,800	955	12,000	1,194	15,000	320	40.0
40/23	1,290	12,900	987	12,400	1,830	23,000	320	40.0
42/15	1,310	13,100	1,011	12,700	1,194	15,000	335	42.0
44/15	1,350	13,500	1,035	13,000	1,194	15,000	350	44.0
48/11	1,375	13,750	820	10,300	875	11,000	380	48.0
50/11	1,410	14,100	820	10,300	875	11,000	400	50.0

European Standard (IEC 60404-8-1) - not commonly used -Minimum Values

Material	Group code	Br		Hc (Hcb)		Hci (Hcj)		BHmax	
		mT	kG	kA/m	kOe	kA/m	kOe	KJ/m^3	MGOe
170/190	R7-1-1	980	9800	700	8795	1900	23875	170	21.4
210/130	R7-1-2	1060	10600	790	9925	1300	16335	210	26.4
250/120	R7-1-3	1130	11300	840	10555	1200	15080	250	31.4
290/80	R7-1-4	1230	12300	700	8795	800	10055	290	36.4
200/190	R7-1-5	1060	10600	760	9550	1900	23875	200	25.1
240/180	R7-1-6	1160	11600	840	10555	1800	22620	240	30.2
280/120	R7-1-7	1240	12400	900	11310	1200	15080	280	35.2
320/88	R7-1-8	1310	13100	800	10055	880	11060	320	40.2
210/240	R7-1-9	1060	10600	760	9550	2400	30160	210	26.4
240/200	R7-1-10	1160	11600	840	10555	2000	25130	240	30.2
310/130	R7-1-11	1300	13000	900	11310	1300	16335	310	39.0
250/240	R7-1-12	1200	12000	830	10430	2400	30160	250	31.4
260/200	R7-1-13	1210	12100	840	10555	2000	25130	260	32.7
340/130	R7-1-14	1330	13300	920	11560	1300	16335	340	42.7
360/90	R7-1-15	1350	13500	800	10055	900	11310	360	45.2

Direction of Magnetisation, DoM

NdFeB magnets are sintered anisotropic materials - they have a preferred direction of magnetisation locked into their structure. So the magnet can only be magnetised in one axis - any attempt to magnetise in another axis results in very little performance. Each NdFeB magnet has a Direction of Magnetisation (DoM). In drawings the poles are labelled (with a North or a South) or the magnet shape has an arrow inside it - this arrow points to the North pole face (the other end is the South pole face). Sometimes one dimension in the description ends in a letter "A". The A (Alignment or Axis) indicates the DoM axis it is magnetised in. The value ending mmA or inchA is the distance between North and South Pole faces. e.g. D10mm x 2mm A is an axially magnetised magnet; 40mm x 20mm x 10mmA has 10mm between the North and South faces. The North pole face of a permanent magnet is a North seeking pole (it seeks the geographic North). By scientific definition of unlike poles attracting, the Earth's geographic North pole is actually a magnetic South pole. We use this definition for DoM.

Temperature Ratings

(Please note - your application will affect the performance available)

Magnet Type Suffix	Rev. Temp. Coef. of Induction (Br), α, %/°C (20-100°C)	Rev. Temp. Coef. of Intrinsic Coercivity (Hci), β, %/°C (20-100°C)	Max. Working Temperature (based on a High working point)
	-0.120	-0.70	80 0C = 176 °F *
M	-0.115	-0.65	1000C = 212 °F *
H	-0.110	-0.60	1200C = 248 °F
SH	-0.105	-0.55	150 0C = 302 °F
UH	-0.100	-0.55	180 0C = 356 °F
EH	-0.095	-0.50	200 0C = 392 °F
VH / AH	-0.090	-0.49	230 0C = 446 °F

* Please note that N52, N50, and N50M are rated to a maximum of 60°C (140°F).

Coatings Available

NdFeB should always be given a protective coating to minimise corrosion risk. There are currently over 40 options for magnet finish. Nickel Copper Nickel (NiCuNi) is the standard (default) coating. This NiCuNi coating is applied unless otherwise requested.

A Zinc (Zn) coating is sometimes used as an alternative to NiCuNi - it is not a shiny as the Nickel finish and is not as good on corrosion resistance.

Nickel Copper Nickel plus Epoxy provides a double coating with improved corrosion resisting properties.

Gold and Silver plating is actually a Gold or Silver layer on top of standard NiCuNi. Black nickel finish is a dull grey/black colour.
Undamaged coatings will prolong magnet lifetime but only if the magnets are used in good environmental conditions (e.g. warm, dry, no humidity). It is impossible to guarantee that NdFeB magnets will be free from long term corrosion. For such requirements consider plated SmCo magnets and all Ferrite magnets.

When using glue you are bonding onto the plating or coating rather than the material itself. If the plating or coating fails, the magnet may become free to move. Methods next to resolve this problem.

Nickel-Copper-Nickel (Ni-Cu-Ni) [standard coating]	Everlube (6102G)	Nickel (Ni)	Zinc (Zn)
Nickel-Copper plus Black Nickel	White Zinc	Black Zinc	Epoxy (Black)
Epoxy (Grey)	Copper (NiCu)	Copper (NiCuNiCu)	Tin (Sn)
Gold (Au) [this is actually NiCuNi plus Gold]	Ni-Cu-Ni plus Rubber	Zn plus Rubber	Zinc Chromate
Silver (Ag) [this is actually NiCuNi plus Silver]	Parylene C	Ni-Cu-Ni plus Parylene C	Ni-Cu-Ni-Au-ParyleneC
Phosphate Passivation	PTFE ("Teflon®") in white	PTFE ("Teflon®") in silvery	PTFE ("Teflon®") in grey
PTFE ("Teflon®") in black	Titanium (Ti)	Titanium Nitride (TiN)	Chrome (bright/ standard)
Chrome (black)	Ni-Cu-Ni plus Everlube	Ni-Cu-Ni plus Epoxy	Ni-Cu-Ni plus PTFE
Zn plus Everlube	Tin (Sn) plus Parylene C	Rhodium	Potted (various)
Coloured (red, green, blue, pink, purple, etc)	Paint (various)	Ni-Cu-Epoxy	Adhesives/silicone silicone sealed (assembly)
Uncoated (bare – recommend vacuum packing as well)	Plastic encased (this fits around pre-coated magnets to give additional protection and is not hermetic)		
Other coatings may be possible - please let us know your requirements.			

Relative Coating Performance - Examples

(your application and its environmental condition may give different results)

PLATING APPLIED 6 commonly coating examples given (other coatings exist)	Overall Thickness (1 micron = 1/1000th mm) (1 micron = 0.03937 mil) (1 inch = 1000 mil)	Pressure Cooker Test (PCT) Test is:- 2 bar, 120°C and 100% RH (hours until corrosion could start to be noted)	Salt Spray Test Test is:- 5% NaCl solution at 35°C (hours until corrosion could start to be noted)
Nickel Copper Nickel (NiCuNi)	15-21 microns	48 hours	24 hours
NiCu + Black Nickel	15-21 microns	48 hours	24 hours
NiCuNi + Black Epoxy	20-28 microns	72 hours	48 hours
NiCuNi + Gold	16-23 microns	72 hours	36 hours
NiCuNi + Silver	16-23 microns	48 hours	24 hours
Zinc	7-15 microns	24 hours	12 hours

Physical Characteristics (Typical)

Characteristic	Symbol	Unit	Value
Density	D	g/cm	7.5
Vickers Hardness	Hv	D.P.N	570
Compression Strength	C.S	N/mm^2	780
Coefficient of Thermal Expansion	C//	10^{-6}/°C	3.4
	CŁ	10^{-6}/°C	-4.8
Electrical Resistivity	p	μ Ω.cm	150
Temperature coefficient of resistivity	α	10^{-4}/°C	2
Electrical Conductivity	σ	10^6S/m	0.667
Thermal Conductivity	k	kCal/(m.h.°C)	7.7
Specific Heat Capacity	c	kCal/(kg.°C)	0.12
Tensile Strength	σ_{UTS}, or S_U	kg/mm^2	8
Young's Modulus	λ / E	$1011N/m^2$	1.6
Flexural Strength	β	$10\text{-}12m^2/N$	9.8
Compressibility	σ	$10\text{-}12m^2/N$	9.8
Rigidity	E.I	N/m^2	0.64
Poisson's Ratio	v		0.24
Curie Temperature	Tc	°C	310

Dimensional Tolerances

The standard NdFeB magnet tolerance is +/-0.1mm. It is possible to produce most shapes to +/-0.05m tolerances but the magnet may cost more.

For tighter tolerances we would have to review the shape to inform you of the tolerances we could achieve (most applications +/-0.05mm is the best). The shape and finish determines the tolerances that can be achieved. Please contact us for a free and without obligation quotation.

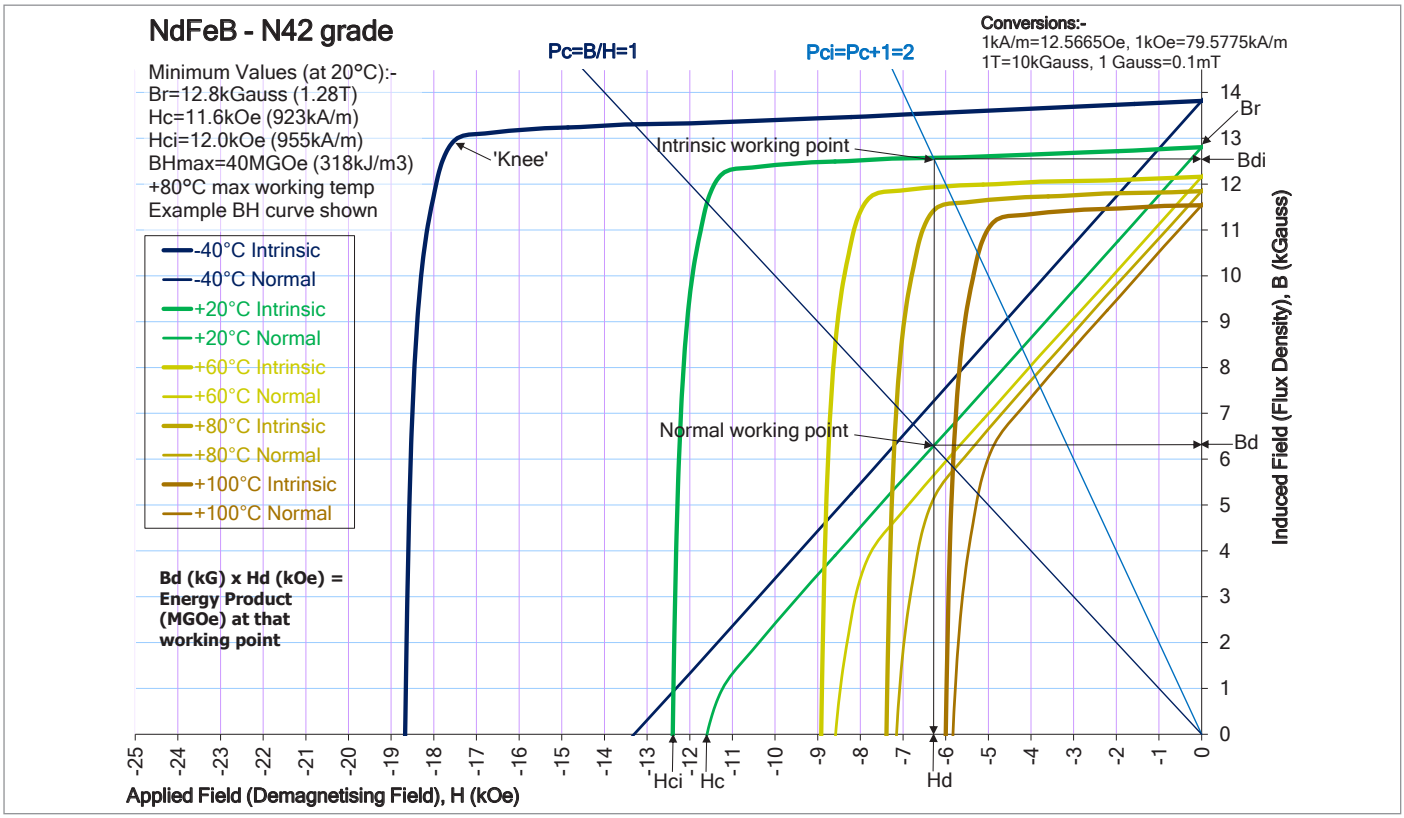

Additional Information

The magnet shape, its environment, and the actual application affect how the NdFeB magnet will perform. Temperature is important as well as damp or wet conditions.

When determining suitability, you should analyse the Intrinsic curve not the Normal curve.

By keeping the intrinsic working point above the 'knee' and ideally at the BHmax working point maximum performance is possible.

If you have any more questions, require technical assistance and would like a quotation, simply contact us.

www.eclipsemagnetics.com

Eclipse Magnetics Ltd, Atlas Way, Sheffield, S4 7QQ, England
T +44 (0)114 225 0600 **F** +44 (0)114 225 0525 **E** info@eclipsemagnetics.com **W** www.eclipsemagnetics.com

While every effort has been made to ensure the accuracy of the information in this publication please note that specifications may change without notice.

Ferrite Magnets/Ceramic Magnets Datasheet

Ferrite Magnets are also known as Ceramic Magnets, Ceramic Ferrite Magnets, Feroba Magnets and Hard Ferrite Magnets. Ceramic Ferrite magnets are one of the most widely used permanent magnet materials in the world. Ferrite magnets are a low cost magnet material perfectly suited for higher volume production runs.

They are termed ceramic due to their excellent electrical insulation ability. Ferrite magnets are superb in damp, wet or marine environments – Ferrite magnets are corrosion free. Because the iron is already in a stable oxidized form in its structure, the iron cannot oxidize ("rust") any further when in water.

Strontium Ferrite (SrO.6Fe2O3) magnets and Barium Ferrite (BaO.6Fe2O3) magnets are the two types of ceramic Ferrite magnet. The Strontium Ferrite magnets are the most commonly manufactured due to having stronger magnetic properties.

The Ferrite magnets (Ceramic magnets) have a characteristic "pencil lead" colour (i.e. a dark grey colour).

They are ferrimagnetic in magnetic performance (good magnetic field and power but, size for size, not as powerful as NdFeB or SmCo). Ferrite Magnets are extremely popular in motor, generator, loudspeaker and marine designs but are found in almost all industries. e.g. Automotive, Sensor, Machines, Aerospace, Military, Advertising, Electrical/Electronic, Academic, Design House, and R&D.

Ferrite magnets can be used at temperatures up to a maximum of +250 degrees C (in a few situations perhaps up to +300 degrees C). There are presently 27 grades of Ferrite Magnet available. The two main grades used today are C5 (also known as Feroba2, Fer2, Y30 and HF26/18) and C8 (also known as Feroba3, Fer3 and Y30H-1). C 5 / Y30 is a general choice of Ferrite Magnet for applications such as overband magnets. C8 / Y30H-1 is a better choice for applications such as loudspeakers and sometimes also motors (C8 has a similar Br to C5 but has a higher Hc and Hci).

Ferrite magnets can be produced in many shapes and sizes. Machining to size is limited to grinding processes - the electrically insulating Ferrite material does not allow wire spark erosion.

As such, the main shapes are blocks, discs, rings, arcs, and rods. Other shapes and custom sizes may well be possible but tooling charges may apply.

NOTE:- Ferrite magnets are not the same as soft ferrites (as used in transformers) - they are totally different in operation.

"Transformer" ferrites do not retain magnetism (soft ferrite). Ferrite magnets are permanent magnets - they retain their magnetism (hard ferrite).

Chinese Standard - increasingly popular in UK, EU and globally

Typical Values

Material	Br		Hc (Hcb)		Hci (Hcj)		BHmax	
	mT	kG	kA/m	kOe	kA/m	kOe	kJ/m^3	MGOe
Y8T	200-235	2.0-2.35	125-160	1.57-2.01	210-280	2.64-3.52	6.5-9.5	0.8-1.2
Y10T	200-235	2.0-2.35	128-160	1.61-2.01	210-280	2.64-3.52	6.4-9.6	0.8-1.2
Y20	320-380	3.2-3.8	135-190	1.70-2.39	140-195	1.76-2.45	18.0-22.0	2.3-2.8
Y22H	310-360	3.1-3.6	220-250	2.76-3.14	280-320	3.52-4.02	20.0-24.0	2.5-3.0
Y23	320-370	3.2-3.7	170-190	2.14-2.39	190-230	2.39-2.89	20.0-25.5	2.5-3.2
Y25	360-400	3.6-4.0	135-170	1.70-2.14	140-200	1.76-2.51	22.5-28.0	2.8-3.5
Y26H	360-390	3.6-3.9	220-250	2.76-3.14	225-255	2.83-3.20	23.0-28.0	2.9-3.5
Y26H-1	360-390	3.6-3.9	200-250	2.51-3.14	225-255	2.83-3.20	23.0-28.0	2.9-3.5
Y26H-2	360-380	3.6-3.8	263-288	3.30-3.62	318-350	4.00-4.40	24.0-28.0	3.0-3.5
Y27H	370-400	3.7-4.0	205-250	2.58-3.14	210-255	2.64-3.20	25.0-29.0	3.1-3.6
Y28	370-400	3.7-4.0	175-210	2.20-2.64	180-220	2.26-2.76	26.0-30.0	3.3-3.8
Y28H-1	380-400	3.8-4.0	240-260	3.02-3.27	250-280	3.14-3.52	27.0-30.0	3.4-3.8
Y28H-2	360-380	3.3-3.8	271-295	3.41-3.71	382-405	4.80-5.09	26.0-30.0	3.3-3.8
Y30	370-400	3.7-4.0	175-210	2.20-2.64	180-220	2.26-2.76	26.0-30.0	3.3-3.8
Y30BH	380-390	3.8-3.9	223-235	2.80-2.95	231-245	2.90-3.08	27.0-30.0	3.4-3.8
Y30H-1	380-400	3.8-4.0	230-275	2.89-3.46	235-290	2.95-3.64	27.0-32.0	3.4-4.0
Y30H-2	395-415	3.95-4.15	275-300	3.46-3.77	310-335	3.90-4.21	27.0-32.5	3.4-4.1
Y32	400-420	4.0-4.2	160-190	2.01-2.39	165-195	2.07-2.45	30.0-33.5	3.8-4.2
Y32H-1	400-420	4.0-4.2	190-230	2.39-2.89	230-250	2.89-3.14	31.5-35.0	4.0-4.4
Y32H-2	400-440	4.0-4.4	224-240	2.81-3.02	230-250	2.89-3.14	31.0-34.0	3.9-4.3
Y33	410-430	4.1-4.3	220-250	2.76-3.14	225-255	2.83-3.20	31.5-35.0	4.0-4.4
Y33H	410-430	4.1-4.3	250-270	3.14-3.39	250-275	3.14-3.46	31.5-35.0	4.0-4.4
Y34	420-440	4.2-4.4	200-230	2.51-2.89	205-235	2.58-2.95	32.5-36.0	4.1-4.5
Y35	430-450	4.3-4.5	215-239	2.70-3.00	217-241	2.73-3.03	33.1-38.2	4.2-4.8
Y36	430-450	4.3-4.5	247-271	3.10-3.41	250-274	3.14-3.44	35.1-38.3	4.4-4.8
Y38	440-460	4.4-4.6	285-305	3.58-3.83	294-310	3.69-3.90	36.6-40.6	4.6-5.1
Y40	440-460	4.4-4.6	330-354	4.15-4.45	340-360	4.27-4.52	37.5-41.8	4.7-5.3

American Standard – used in UK but being replaced by Chinese

Typical Values

Material	Br		Hc (Hcb)		Hci (Hcj)		BHmax	
	mT	kG	kA/m	kOe	kA/m	kOe	kJ/m^3	MGOe
C1	230	2.300	148	1.86	258	3.50	8.36	1.05
C5	380	3.80	191	2.40	199	2.50	27.0	3.40
C7	340	3.40	258	3.23	318	4.00	21.9	2.75
C8 / C8A	385	3.85	235	2.95	242	3.05	27.8	3.50
C8B	420	4.20	232	2.91	236	2.96	32.8	4.12
C9	380	3.80	280	3.52	320	4.01	26.4	3.32
C10	400	4.00	280	3.52	284	3.57	30.04	3.82

Quick Cross Reference Guide

C5 = Feroba2 = Fer2 = Y30 = HF26/18
C8/C8A = Feroba3 = Fer3 = Y30H–1.
C1 = Y10T / Y8T
C7 = Y26H–2
C8B = Y33
C9 = Y30H–2
C10 = Y33H
C11 = Y34
C12 = Y30H–2.

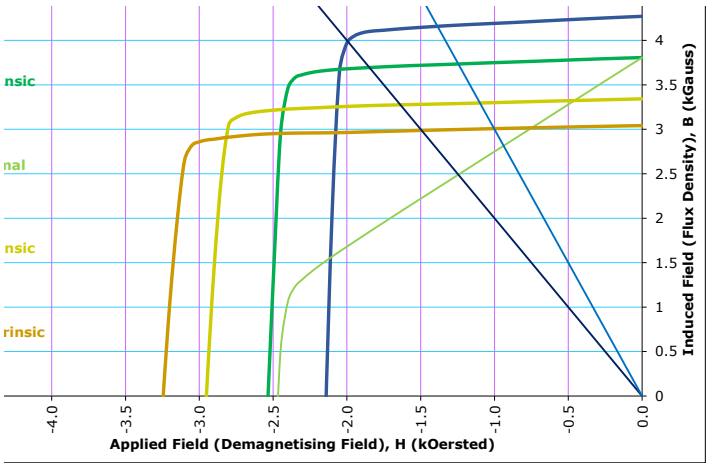

European Standard (IEC 60404–8–1) – not popular in UK or USA

Minimum/Typical Values

Material	Br		Hc (Hcb)		Hci (Hcj)		BHmax	
	mT	kG	kA/m	kOe	kA/m	kOe	kJ/m^3	MGOe
HF8/22	200/220	2.00/2.20	125/140	1.57/1.76	220/230	2.76/2.89	6.5/6.8	0.8/1.1
HF20/19	320/333	3.20/3.33	170/190	2.14/2.39	190/200	2.39/2.51	20.0/21.0	2.5/2.7
HF20/28	310/325	3.10/3.25	220/230	2.76/2.89	280/290	3.52/3.64	20.0/21.0	2.5/2.7
HF22/30	350/365	3.50/3.65	255/265	3.20/3.33	290/300	3.64/3.77	22.0/23.5	2.8/3.0
HF24/16	350/365	3.50/3.65	155/175	1.95/2.20	160/180	2.01/2.26	24.0/25.5	3.0/3.2
HF24/23	350/365	3.50/3.65	220/230	2.76/2.89	230/240	2.89/3.01	24.0/25.5	3.0/3.2
HF24/35	360/370	3.60/3.70	260/270	3.27/3.39	350/360	4.40/4.52	24.0/25.5	3.0/3.2
HF26/16	370/380	3.70/3.80	155/175	1.95/2.20	160/180	2.01/2.26	26.0/27.0	3.2/3.4
HF26/18	370/380	3.70/3.80	175/185	2.20/2.33	180/190	2.26/2.39	26.0/27.0	3.3/3.4
HF26/24	370/380	3.70/3.80	230/240	2.89/3.01	240/250	3.01/3.14	26.0/27.0	3.3/3.4
HF26/26	370/380	3.70/3.80	230/240	2.89/3.01	260/270	3.27/3.39	26.0/27.0	3.3/3.4
HF26/30	385/395	3.85/3.95	260/270	3.27/3.39	300/310	3.77/3.89	26.0/27.0	3.3/3.4
HF28/26	385/395	3.85/3.95	250/265	3.14/3.33	260/275	3.27/3.45	28.0/30.0	3.5/3.8
HF28/28	385/395	3.85/3.95	260/270	3.27/3.39	280/290	3.50/3.60	28.0/30.0	3.5/3.8
HF30/26	395/405	3.95/4.05	250/260	3.14/3.33	260/270	3.27/3.39	30.0/31.5	3.8/3.9
HF32/17	410/420	4.10/4.20	160/170	2.01/2.14	165/175	2.07/2.20	32.0/33.0	4.0/4.1
HF32/22	410/420	4.10/4.20	215/225	2.70/2.83	220/230	2.76/2.89	32.0/33.0	4.0/4.1
HF32/25	410/420	4.10/4.20	240/250	3.01/3.14	250/260	3.14/3.27	32.0/33.0	4.0/4.1

Tolerances

Tolerances:– +/–3% is common. +/–0.25mm is also commonly used. The tolerance available will depend on the size and shape of the magnet.

Corrosion Resistance

Corrosion resistance is excellent. Ferrite magnets are essentially made from oxides of iron and Strontium and Barium.

They cannot corrode in water. They are sometimes regarded as being 'magnetic rust'.

Maximum and Minimum Working Temperatures

(Please note – your application will affect the performance available)
The maximum recommended operating temperature is +250 to +300 degrees C.

The minimum operating temperature varies with the magnet shape and magnetic circuit.

It could be as low as –60 degrees C but may be as high as 0 (zero) degrees C.

Temperature coefficients

Rev. Temp. Coef. of Induction (Br), α, %/°C	Rev. Temp. Coef. of Intrinsic Coercivity (Hci), β, %/°C
–0.2	(+) 0.27

Physical Characteristics (Typical)

Characteristic	Symbol	Unit	Value
Density	D	g/cc	4.9 to 5.1
Vickers Hardness	Hv	D.P.N	400 to 700
Compression Strength	C.S	N/mm^2	680–720
Coefficient of Thermal Expansion	C//	10-6/°C	15
	C⊥	10-6/°C	10
Specific Heat Capacity	c	J/kg°C	795–855
Electrical Resistivity	ρ	μ Ω.cm	$1x10^{10}$
Thermal Conductivity	k	W/cm°C	0.029
Modulus of Elasticity	λ / E	Pa	1.8x1011
Compression Strength	C.S.	Pa	$895x10^6$
Tensile Strength	σUTS or S U	Pa	$34x10^6$
Flexural Strength	σ	Pa	$62x10^6$
Hardness		Mohs	7
Poisson's Ratio	v		0.28
Curie Temperature	Tc	°C	450

Additional Notes

Ferrite / Ceramic magnets are permanent magnets. They have no relationship to soft magnetic ferrites.

Ferrite Magnets, termed Hard ferrites, are not the same as soft ferrites as would be used in transformers.

The term Hard relates to the fact that when the Ferrite magnet is exposed to a short external magnetic field, the Ferrite magnets retains magnetism due to it having a high coercivity, Hc.

Soft ferrite material (as used in transformer cores) does not retain magnetism after exposure to the same short magnetic field due to soft ferrite materials having low coercivity, Hc.

The high coercive force of Ferrite magnets means they are classified as hard materials, like all the other permanent magnets.

The Ferrite magnets has a more complete name of Hard Hexagonal Ferrite permanent magnets.

The magnet shape, its environment, and the actual application affect how the Ferrite magnet will perform.

When determining suitability, you should always assess the Intrinsic curve rather than the Normal curve.

Maximum performance is possible by keeping the intrinsic working point above the 'knee' and ideally at the BHmax working point.

In Ferrite magnets the Hci actually increases with rising temperature (a benefit in electric motors).

At higher temperatures the resistance to demagnetising increases in Ferrite magnets.

Demagnetisation is possible in colder temperatures (e.g. freezing conditions) – a higher working point reduces the risk.

Ferrite magnets have excellent corrosion resistance – they do not rust or degrade when in water.

Anisotropic grades (direction of magnetisation locked in structure) are stronger than isotropic grades.

Isotropic (unoriented) grade example:– C1; Anisotropic (oriented) grade examples:– C5, C7, C8.

If you have any more questions, require technical assistance or would like a quotation, simply contact us.

If you have any more questions, require technical assistance and would like a quotation, simply contact us.

www.eclipsemagnetics.com

Eclipse Magnetics Ltd, Atlas Way, Sheffield, S4 7QQ, England
T +44 (0)114 225 0600 **F** +44 (0)114 225 0525 **E** info@eclipsemagnetics.com **W** www.eclipsemagnetics.com

While every effort has been made to ensure the accuracy of the information in this publication please note that specifications may change without notice.

Wire Size & Current Rating (A) Guide

Current carrying capacity is defined as the amperage (A) of which a conductor can carry before melting either the conductor or the insulation. Heat caused by an electrical current flowing through the conductor will determine the amount of current a wire will handle.

Theoretically, the amount of current that can be passed through a single bare copper wire can be increased until the heat generated reaches the melting temperature of the copper. However, there are many factors that will limit the amount of current that can be passed through a wire, of which the key ones are detailed below;

· **Conductor Size:**
The larger the circular mil area, the greater the current carrying capacity. The amount of heat generated should never exceed the maximum temperature rating of the insulation.

· **Ambient Temperature:**
The higher the ambient temperature, the less heat required to reach the maximum temperature rating of the insulation.

· **Conductor Number:**
Heat dissipation is lessened as the number of individually insulated conductors, bundled together, is increased.

· **Installation Conductors:**
Restricting the heat dissipation by installing the conductors in conduit, duct, trays or raceways lessens the current carrying capacity. This restriction can be alleviated somewhat by using proper ventilation methods, forced air cooling, etc.

Taking into account all the variables involved, no simple chart of current ratings can be developed and used as the final word when designing a system where amperage ratings can become critical.

Conductor Size This chart shows the current requiredto raise the temperatures of stranded insulated (Rubber/Vinyl) conductors in free air (30°C ambient).					Current Rating
A.W.G.	C.M.A.	Diameter (mm)	mm^2	Size	
#32	63	0.20	0.03		0.3A
#30	101	0.26	0.05		0.5A
#28	160	0.32	0.08		0.7A
#26	254	0.41	0.13		1.0A
#24	404	0.51	0.20		2.0A
#22	643	0.64	0.33		3.0A
#20	1,020	0.81	0.52		5.0A
#18	1,624	1.02	0.82		7.0A
#16	2,583	1.29	1.31		10.0A
#14	4,106	1.63	2.08		20.0A
#12	6,530	2.05	3.31		30.0A
#10	10,384	2.59	5.26		50.0A

Please note that this section is provided for information only. Whilst J.S.T. (U.K.) Ltd makes every effort to ensure the accuracy of technical data, we accept no responsibility or liability for any damages or injury arising directly or indirectly from any error or omission in such technical detail, whether caused by our negligence or otherwise. Please also note that we reserve the right to amend or delete this information without notice.

JST
The Quality Connection
J.S.T.(U.K.) Ltd.
Blyth Road, Halesworth,
Suffolk, IP19 8EW, England
Phone: +44 1986 874131
Fax: +44 1986 874276
www.jst.co.uk