Finite Element Modelling Of Creep Glued-Laminated Bamboo

Ngudiyono[1)*,2)], Bambang Suhendro[3)], Ali Awaludin[3)], Andreas Triwiyono[3)]

[1)*] PhD Student Department of Civil and Environmental Engineering, Gadjah Mada University, Yogyakarta, Indonesia, Corresponding author at Department of Civil and Environmental Engineering, Gadjah Mada University, Grafika Street # 2, UGM Campus, Sleman, Yogyakarta, 55281, E-mail : ngudiyono@unram.ac.id
[2)] Department of Civil Engineering, Mataram University, Mataram, Indonesia
[3)] Department of Civil and Environmental Engineering, Gadjah Mada University, Yogyakarta, Indonesia

Abstract

Glued-laminated bamboo is classified as a viscoelastic material because it possesses properties that are common to both perfect solids and liquids. Under long term constant loading the glued-laminated bamboo will causing creep deformation. Creep behaviour is well known as one of the primary structural behaviours to be understood for the development analysis and design of glued-laminated bamboo structures. There are three methods can be used to describe the creep behaviours of viscoelastic material. One method of predicting the creep response of some viscoelastic materials is by mechanical model, where the long term creep deformation represented by a set of springs and dashpots. The well accepted mechanical model to predict creep of glued-laminated bamboo is the four solid elements, usually called Burger model. In this manuscript, the constitutive equation Burger model is converted into relaxation shear modulus of prony series in ABAQUS finite element software.

***Keywords*:** glued-laminated bamboo, creep, finite element, burger model, prony series

1. Introduction

In recent years, bamboo has been widely used to replace timber as building material. The bamboo can typically be harvested in less than 3 - 4 years, renewable and sustainable material, mechanical properties similiar with timber (Sharma et al., 2015; Ni et al., 2016). The originally bamboo cross section is hollow and has limited dimension. By using laminated technology, the rectangular elements of bamboo glued together will product new material called glued-laminated bamboo. Its have been applicated to many members of building structures such as beam, column and truss.

Glued-laminated bamboo is classified as a viscoelastic material because it possesses properties that are common to both perfect solid and liquid. Under long term constant loading the glued-laminated bamboo will causing creep deformation. Creep behaviour is well known as one of the primary structural behaviours to be understood for the development analysis and design of glued-laminated bamboo structures (Holzer et al., 1989; Gottron et al., 2014). Usually, three methods can be used to describe the creep behaviours of viscoelastic material. One method of predicting the creep response of some viscoelastic materials is by mechanical

model, where the long term creep deformation represented by a set of springs and dashpots (Findley et al., 1976). The well accepted mechanical model to predict creep of glued-laminated bamboo is the four solid elements, usually called Burger model. This model has been proved in many creep tests, it not only can be applied to describe the creep phenomenon but also can be used in the program of finite element method conveniently. In this manuscript, the constitutive equation Burger model is converted into relaxation shear modulus of prony series in ABAQUS finite element software.

2. Burger Model of Creep

Burger model is derived by assembling Kelvin and Maxwell bodies in parallel configuration (Fig. 1). The model capable to predict both primary and secondary creep.

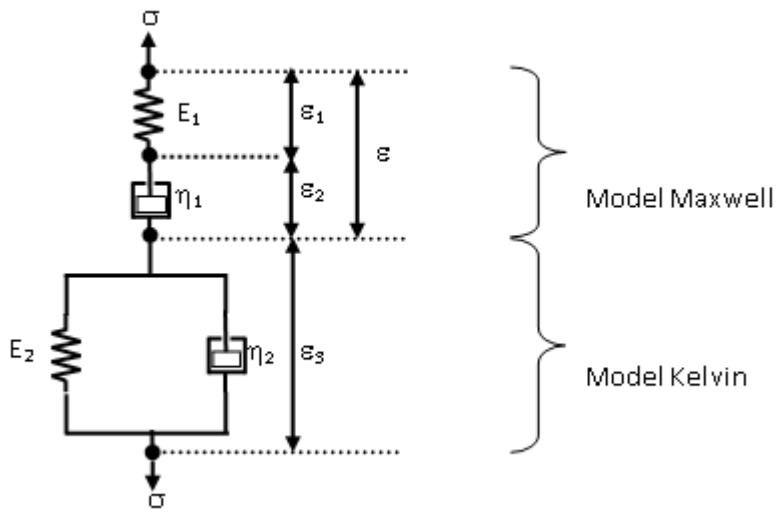

Figure 1. Mechanical Element of Burger Model (Findley et al., 1976)

Kon and Yuan (2010) have been converted Burger model to prony series. Constitutive equation of Burger model can be expressed as

$$\sigma + p_1\dot{\sigma} + p_2\ddot{\sigma} = q_1\dot{\varepsilon} + q_2\ddot{\varepsilon} \tag{1}$$

p_1, p_2, q_1, q_2 expressed by elastic modulus then

$$p_1 = \frac{\eta_M E_M + \eta_M E_K + \eta_K E_M}{E_M E_K},\ p_2 = \frac{\eta_M \eta_K}{E_M E_K},\ q_1 = \eta_M,\ q_2 = \frac{\eta_M \eta_K}{E_K} \tag{2}$$

If $E_M = 2G_M, E_K = 2G_K, \eta_M = 2\eta'_M, \eta_K = 2\eta'_K$, so

$$p_1 = \frac{\eta'_M G_M + \eta'_M G_K + \eta'_K G_M}{G_M G_K}, p_2 = \frac{\eta'_M \eta'_K}{G_M G_K}, q_1 = 2\eta'_M, q_2 = 2\frac{\eta'_M \eta'_K}{G_K} \quad (3)$$

where,

$$G_M = \frac{E_M}{2(1+\mu_M)}, G_K = \frac{E_K}{2(1+\mu_K)}$$

$$\eta'_M = \frac{\eta_M}{2(1+\mu'_M)}, \eta'_K = \frac{\eta_K}{2(1+\mu'_K)} \quad (4)$$

If the deformation of viscoelastic bulk ignored, where $\mu_K = \mu'_M = \mu'_K = 0{,}5$

Convert Burger model into Laplace transform

$$\bar{Y}(s) = \frac{q_1 s + q_2 s^2}{s(1+p_1 s + p_2 s^2)} = \frac{1}{p_2}\left\{\left[\frac{q_1}{(s+\alpha)(\beta-\alpha)} + \frac{q_1}{(s+\beta)(\alpha-\beta)}\right]\right.$$

$$\left. + \left[\frac{q_1\alpha}{(s+\alpha)(\alpha-\beta)} + \frac{q_1\beta}{(s+\beta)(\beta-\alpha)}\right]\right\} \quad (5)$$

$$\alpha, \beta = \frac{p_1 \pm \sqrt{p_1^{\,2} - 4p_2}}{2p_2}$$

Then Laplace inverse transform is applied to the last expression, so

$$Y(t) = \frac{G_M}{(\alpha-\beta)}\left[(\alpha - \frac{q_1}{q_2})e^{-\alpha t} + (\frac{q_1}{q_2} - \beta)e^{-\beta t}\right] \quad (6)$$

Relaxation shear modulus is requested in ABAQUS, substitution Eqs (2 - 3) into (5).

$$G(t) = \frac{G_M}{(\alpha-\beta)}\left[(\frac{G_K}{\eta_K} - \beta)e^{-\beta t} + (\alpha - \frac{G_K}{\eta_K})e^{-\alpha t}\right] \quad (7)$$

In prony series form,

$$G(t) = G_\infty + \left(\sum_{i=1}^{n} G_i G_0 e^{(-t/\tau_i)}\right) \quad (8)$$

Eqs (8) the series can be expanded into two items (n = 2),

$$G(t) = G_\infty + G_1 e^{(-t/\tau_i)} + G_2 e^{(-t/\tau_2)} \quad (9)$$

where

$$G_\infty = 0, G_1 = \frac{G_M}{(\alpha-\beta)}\left(\frac{G_K}{\eta'_K} - \beta\right), G_2 = \frac{G_M}{(\alpha-\beta)}\left(\alpha - \frac{G_K}{\eta'_K}\right), \tau_1 = \frac{1}{\beta}, \tau_2 = \frac{1}{\alpha}$$

If,

$$g(t) = \frac{G(t)}{G_0}$$

$$G(t) = G_\infty + G_0(g_1 e^{(-t/\tau_i)} + g_2 e^{(-t/\tau_2)}) \tag{10}$$

where

$$\boxed{G_0 = G_M, g_1 = \frac{1}{(\alpha-\beta)}\left(\frac{G_K}{\eta'_K} - \beta\right), g_2 = \frac{1}{(\alpha-\beta)}\left(\alpha - \frac{G_K}{\eta'_K}\right)}$$

$\boxed{E_M, \mu_M, g_1, g_2, \tau_1, \tau_2}$ are parameters of Burger model which can be used in ABAQUS software.

3. Finite Element Modelling Creep

The 3D model of the glued-laminated bamboo beam was created and analysed with finite element software ABAQUS. Properties creep data that used for modelling in this manuscript was provided by Li and Xiao (2015). They were measured compression and tension creep of glued-laminated bamboo under normal indoor condition at Hunan University, located in Changsha during one year (365 days). According to the Burger model, data creep test then evaluated resulting some parameters viscoelastic material of glued-laminated bamboo such as $E_1 = E_M$, $E_2 = E_K$, $\eta_1 = \eta_M$, $\eta_2 = \eta_K$ showed in Table 1 and conversed in prony series showed in Table 2. The model glued-laminated bamboo beam according Eratodi (2014), showed in Fig 1, with different load level P = 10 kN, 20 kN, 30 kN respectively

The procedures are modelling creep of glued-laminated bamboo as follow (i) create geometry of glued-laminated bamboo; (ii) input the material properties and creep parameters; (iii) use element type C3D20R (20-node quadratic brick, reduced integration), the mesh consist of 2280 elements; (iii) apply the constant loading under various applied load level and boundary condition; (iv) use visco analyse type with time periode 365 days, increment 1 and error tolerance 1 x 10^{-6}. The geometry, meshing, apply constant load and boundary condition showed in Fig. 2.

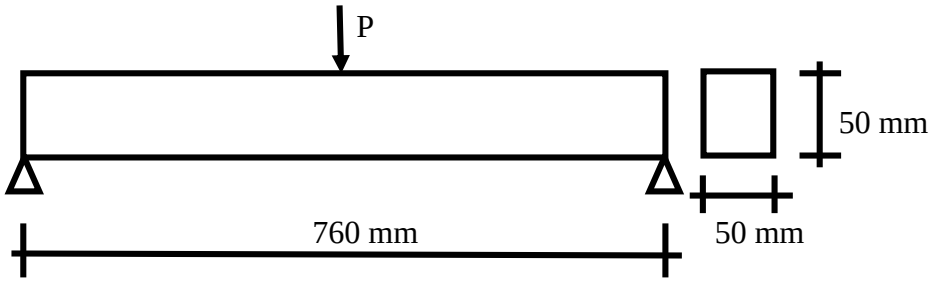

Figure 1. Glued-Laminated Bamboo Beam (Eratodi, 2014)

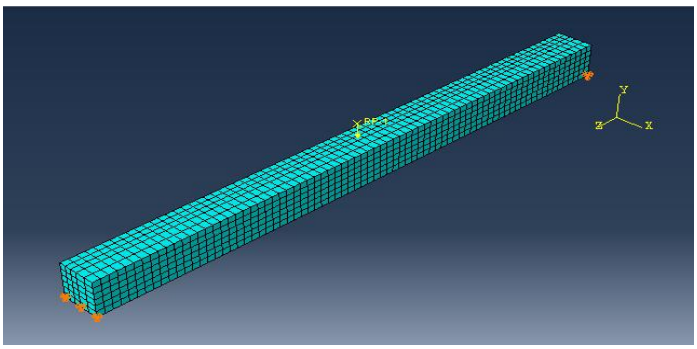

Figure 2. The geometry, meshing, apply constant load and boundary condition glued-laminated bamboo beam

Table 1. Creep properties compression and tension of glued-laminated bamboo (Li and Xiao, 2015)

Parameter	Unit	Compression	Tension
$E_1 = E_M$	MPa	4490	5970
$E_2 = E_K$	MPa	3440	1330
$\eta_1 = \eta_M$	MPa/day	27600000	15100000
$\eta_2 = \eta_K$	MPa/day	651300	102400

Table 2. Creep properties compression and tension of glued-laminated bamboo in prony series

Parameter	Compression	Tension
g_1	0,88	0,18
τ_1	6951,51	13945,73
g_2	0,11	0,81
τ_2	16,74	13,96

4. Result and Discussion

The results numerical simulation creep displacement behavior of glued-laminated bamboo beam under different load level P = 10 kN, 20 kN and 30 kN showed in Fig. 3 and the maximum diplacement in mid span U_2 showed in Fig. 4, 5, 6 repectively.

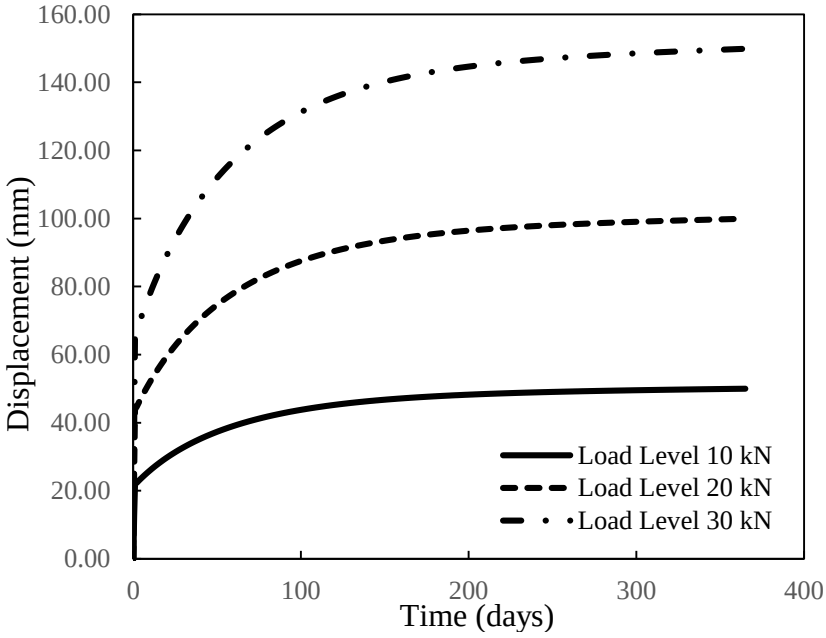

Figure 3. Creep displacement U_2 under constant load

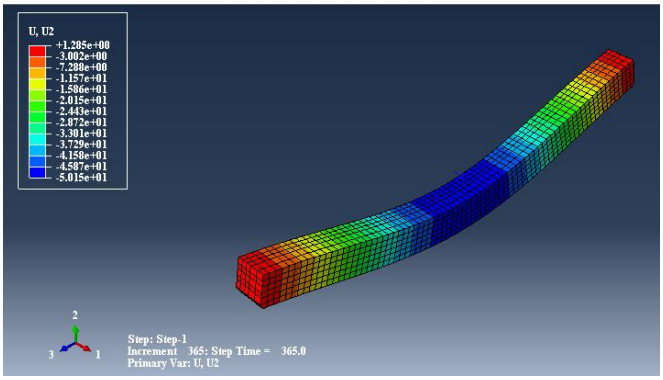

Figure 4. Creep displacement U_2 apply constant load level 10 kN

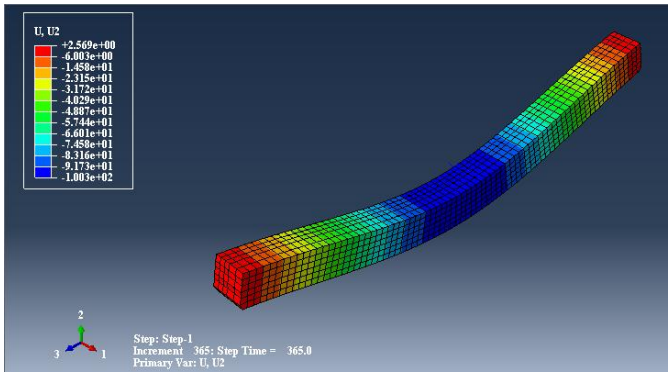

Figure 5. Creep displacement U_2 apply constant load level 20 kN

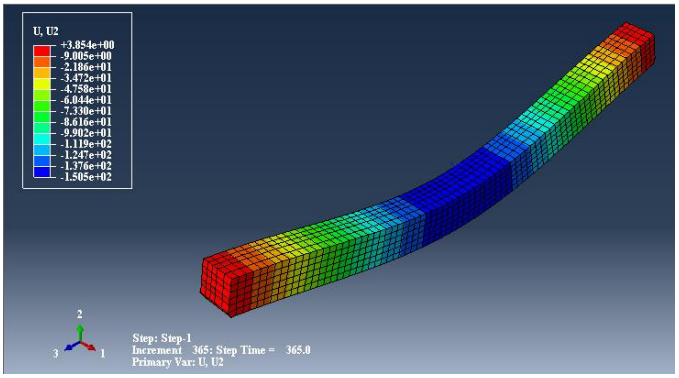

Figure 6. Creep displacement U_2 apply constant load level 30 kN

According to the Fig 3., the initial elastic and creep diplacement of the beam increases in proportion to the load level. The initial elastic diplacement for load level 10 kN, 20 kN, 30 kN are 21.83 mm, 43.65 mm, 65.48 mm respectively. Here the authors also can evaluate quickly initial elastic diplacement based to the elastic theory, displacement of the beam under one unit point load in mid span $\Delta_e = PL^3/48EI$ are 29.41 mm, 58.82 mm, 88.24 mm respectively. In comparison, we can see that the magnitude elastic diplacement theory are more greater than numerical analysis. The graphic also show primary and secondary creep behaviour of the beam.

The Fig. 4- 6 ilustrate distribution of creep diplacement at time 365 days in the span length. The maximum creep diplacement in various load level 10 kN, 20 kN, 30 kN are 50.15 mm, 100.30 mm, 150.50 mm respectively.

4. Conclusion

Some conclusions according numerical analysis above can be drawn as follows: (1) Burger Model can be used as input parameter properties in ABAQUS with conversed in prony series; (2) The finite element analysis is satisfy method for prediction creep diplacement behaviour of viscoelastic material glued laminated bamboo under constant loading.

References

Abaqus Version 6.4 (2003). Abaqus/CAE User's Manual. Pawtucket. Rhode Island. USA.

Eratodi I. G. L. B. (2014). Beam-Column Connection Glued-Laminated Use Steel Plate Dikarter and, Desertasion, Postgraduate Program, Faculty of Engineeering, Gadjah Mada University, Yogyakarta.

Findley M. N., Lai J. S., & Onaran K. (1976). Creep and Relaxation of Nonlinear Viscoelastic Material with Introduction to Linear Viscoelastic, Dover Publication, Inc. New York.

Gottron J., Harries K. A., & Xu Q. (2014). Creep Behavior of Bamboo. *Contruction and Building Material 66*, pp. 79-88.

Holzer S. M., Loferski J. R., & Dillard D. A. (1989). A Review of Creep in Wood : Concepts Relevent to Develop Long-Term Behavior Predictions for Wood Structures. *Wood and Fiber Science, 21(4),* pp. 376-392

Kong J., & Yuan J. (2010). Application of Linear Viscoelastic Differential Constitutive Equation in ABAQUS. *International Conference On Computer Design And Appliations (ICCDA).*

Li L. & Xiao Y. (2015). Creep Behavior of Glubam and CFRP-Enhanced Glubam Beams. *Journal of Compositers for Contruction, June 10,* pp 1-11.

Ni L., Zhang X., Liu H., Sun Z., Song G., Yang L., Jiang Z. (2016). Manufacture and Mechanical Properties of Glued Bamboo Laminates, Glued Bamboo Lumber. *BioResources 11(2),* pp 4459 – 4471.

Sharma B., Gatoo A., Bock M., Ramage M. (2015). Engineered Bamboo for Structural Applications. *Construction and Building Material 81*, pp. 66-73.